TOWN OF WINDSOR, CONNECTICUT

HIGHWAY ENGINEERING STANDARDS AND SPECIFICATIONS

May 2010

TOWN OF WINDSOR

First in Connecticut. First for its citizens.

May 5, 2010

Subject: Town Engineering Standards
Letter of Promulgation

In accordance with Section 15-20 of the Town of Windsor Code of Ordinances, the attached Highway Engineering Standards and Specifications dated May 2010 are hereby promulgated.

The purpose of these Standards and Specifications is to provide consistent guidance to developers, contractors and homeowners so that public improvements reflect the use of quality materials and proven construction techniques that will continue to enhance our community.

Since the last revision of these standards and specifications, some significant changes have occurred in construction methods, materials, and design guides. For example:

- the local residential roadway width has been reduced from 30 feet to 28 feet to address concerns with stormwater management and wetlands protection,
- sidewalk details and specifications have been modified to include detectable warning strips at sidewalk ramps and a change in doweling at sidewalk joints, and
- a new specification for stamped concrete surfaces has been added and patterns have been specified for the different potential uses such as crosswalks, snowshelves, and truck mountable aprons on cul-de-sac islands.

The adoption of several Town Ordinances and manuals including the Stormwater Management Ordinance, the Erosion and Sediment Control Ordinance, the Town Stormwater Manual, and the Traffic Calming Manual has also resulted in some new and/or revised details and specifications.

These Standards and Specifications were developed by the Engineering Division of the Development Services Group. They will be revised from time to time to reflect changes in technology, materials, and construction practices.

Thomas F. Lenehan

Thomas F. Lenehan, P. E.
Town Engineer

LIST OF REVISIONS

May 2010

Revision Number	Section	Description	Date
1	VI	Detail D-208 – "Median Detail" updated.	8/4/2010
2	IIIA	Item No. 15 added to specify corner cutoffs at street intersections.	11/29/2010
3	V	Index updated - Title of Specification 231 updated to match written specification.	11/29/2010
4	V	Written Specification 265 – "Portland Cement Concrete Sidewalks and Ramps" revised to clarify broom finish of sidewalks.	11/29/2010
5	VI	Index updated to include new detail D-210.	11/29/2010
6	VI	Detail D-201 – "Cul-de-Sac Construction" updated to show corner cutoffs.	11/29/2010
7	VI	Detail D-407 – "Signage" updated to change font to be used on street name signs.	11/29/2010
8	VI	NEW * Detail D-210 – "Bituminous Concrete Commercial Parking Areas and Drives" added.	11/29/2010

TABLE OF CONTENTS

SECTION PAGE

SECTION I. DEFINITIONS I-1

SECTION II. AUTHORITY – PERMITS – INSURANCE – REGULATIONS II-1
- A. PURPOSE II-1
- B. AUTHORITY II-1
- C. LICENSES AND PERMITS II-1
- D. LIABILITY INSURANCE II-2
- E. REGULATIONS II-4

SECTION III. DESIGN CRITERIA – PUBLIC IMPROVEMENTS III-1
- A. LOCAL ROAD DESIGN CRITERIA III-1
- B. DRAINAGE DESIGN III-4
  - (1) Purpose III-4
  - (2) Drainage Design Criteria III-5
  - (3) Stormwater Quality Criteria III-5

SECTION IV. CONSTRUCTION GUIDELINES FOR PUBLIC IMPROVEMENTS IV-1
- A. PURPOSE IV-1
- B. INSPECTION IV-1
- C. PERMITS IV-2
- D. STATE OF CONNECTICUT, DEPARTMENT OF TRANSPORTATION (DOT) SPECIFICATION STANDARDS IV-2
- E. METROPOLITAN DISTRICT COMMISSION (MDC) STANDARDS IV-2
- F. COORDINATION OF UTILITIES IV-2
- G. SCHEDULE OF WORK IV-3
- H. WORKING HOURS IV-3
- I. SAFETY AND TRAFFIC CONTROL IV-3
- J. SUBMITTALS AND TESTING IV-4
- K. USE OF RECLAIMED MATERIALS IV-4
- L. SIGNS IV-4
- M. DAILY CLEAN-UP IV-4
- N. SANITARY CONDITIONS IV-5
- O. SURVEYS AND MONUMENTS IV-5
- P. COLD WEATHER CONSTRUCTION IV-5
- Q. SEQUENCE OF CONSTRUCTION IV-5
- R. UTILITY CUTS IV-6

SECTION V. TECHNICAL SPECIFICATIONS V-1

SECTION VI. STANDARD DETAILS VI-1

LIST OF APPENDICES

APPENDIX A - APPLICATION FOR REQUEST FOR LICENSE
APPENDIX B - PERFORMANCE BOND - EXCAVATING
APPENDIX C - APPLICATION FOR PERMIT FORM
APPENDIX D - SUBDIVISION/CONSTRUCTION CHECKLIST

SECTION I. DEFINITIONS

The following terms shall have the meanings as defined:

CONSULTING ENGINEER:
The Consulting Engineer is the person, firm, or corporation engaged in the design and/or contract administration for the project, where an agreement has been executed by the Town or Developer.

CONTRACTOR:
The Contractor is the person, firm, or corporation engaged in the actual construction of the project where an agreement has been executed with the Town or Developer.

DEVELOPER:
The Developer is the person, firm, or corporation engaged in the development of approved projects and who is responsible for all aspects of the proposed project.

EROSION AND SEDIMENT CONTROL ORDINANCE:
Ordinance that regulates erosion and sediment control associated with land disturbing activities, Chapter 3, Article VIII of the Windsor Code of Ordinances.

FLOODPLAIN MANAGEMENT ORDINANCE:
Ordinance that regulates activities within floodways and special flood hazard areas, Chapter 3, Article III of the Windsor Code of Ordinances.

FORM 816:
State of Connecticut, Department of Transportation, Standard Specifications for Roads, Bridges and Incidental Construction, 2004, as amended.

INLAND WETLANDS & WATERCOURSES COMMISSION:
Inland Wetlands & Watercourses Commission of the Town of Windsor.

INLAND WETLANDS & WATERCOURSES REGULATIONS:
Current regulations covering land use of wetlands and watercourses as approved by the Town of Windsor.

INSPECTOR:
The Inspector is the authorized agent of the Town Engineer for public improvement projects in the Town of Windsor.

PLANNING & ZONING COMMISSION:
The Planning & Zoning Commission of the Town of Windsor.

PROJECT:
The entire construction to be performed as required by contract documents, regulations or approved plans.

SPECIFICATIONS:
General Conditions, Special Conditions, and Technical Provisions governing the method, materials and quality of work performed.

STORMWATER MANAGEMENT ORDINANCE:
Ordinance that regulates post construction stormwater management resulting from land disturbing activities, Chapter 3, Article III of the Windsor Code of Ordinances.

STORMWATER MANUAL:
Town of Windsor Stormwater Manual.

SUBDIVISION REGULATIONS:
Current regulations covering subdivisions as approved by the Town of Windsor.

TOWN:
Town of Windsor, Connecticut.

TOWN ENGINEER:
Town Engineer of the Town of Windsor acting personally or through any assistants authorized for such acts by the Town Engineer.

WORK:
Any and all obligations, duties, and responsibilities necessary for the successful completion of the Project assigned to or undertaken by the Developer or Contractor, in accordance with the approved plans and specifications, including the furnishing of all labor, materials, tools, testing, and equipment.

ZONING REGULATIONS:
Current regulations governing zoning in the Town of Windsor.

SECTION II. AUTHORITY – PERMITS – INSURANCE – REGULATIONS

A. PURPOSE

The purpose of these Engineering Standards and Specifications is to provide minimum quality standards for all public improvements being performed within the Town of Windsor. The Town's zoning regulations, subdivision regulations, inland wetland regulations, and applicable Town Ordinances are referenced to further amplify other requirements necessary for the implementation of public improvements.

B. AUTHORITY

The authority for the implementation of the engineering standards is given to the Town Manager or the Town Manager's designee under Section 15-20 of the Code of Ordinances, Town of Windsor.

> "The town manager or the town manager's designee shall cause to be promulgated specifications and engineering standards for the construction of highways, sidewalks, drains and all other such public improvements within the limits of the town. These regulations will include a provision for the storage of materials, cleanup and removal of temporary pavement and utility markings within the Town right of way."

C. LICENSES AND PERMITS

Only licensed Contractors are allowed to receive a permit for work within the Town's Right of Way. Separate permits are required for each specific excavation or construction activity performed within the Town right of way or any part of any street or highway under the control of or maintained by the Town. (Reference: Code of Ordinances 15-51). The following is an outlined procedure for obtaining a license and permit.

1. Complete the request for license form (see Appendix A). License fees will be charged for either a new license or a license renewal, at the amount approved by the Town Council. All licenses expire on the last day of December each year, and must be renewed for the Contractor to obtain a permit the following year.

2. Provide a performance bond in the amount of $10,000 minimum (see Appendix B). This is required by Town Ordinance Section 15-51 and the amount may change as determined by the Town Manager or the Town Manager's designee. The bond must guarantee work for five (5) years from the project completion date.

3. Provide a Certificate of Insurance with the limits, conditions, and coverages as specified in Paragraph D below.

4. Complete the application for permit (see Appendix C). Provide a permit fee as required by the Town Ordinance and identified in the fee schedule approved by the Town Council.

5. The Contractor performing the work must show evidence that "Call Before You Dig" (1-800-922-4455) has been notified and a request number has been issued. This number shall be shown on the permit form.

6. Notify the Inspector's Office (860) 285-1876 within 48 hours prior to performing any work within the public right of way.

Any permit issued by the Town Manager or the Town Manager's designee may be limited in duration of time for the purpose of completing work quickly and consistent with the requirements of the public welfare and safety.

In any case, no permit time limit shall be longer than 1 year from the date of the permit issued.

D. LIABILITY INSURANCE

Liability insurance is required by all contractors performing any work within the Town right of way of any street or highway under the control of or maintained by the Town of Windsor. The authority to review such insurance is identified in the Town Code of Ordinances, Section 15-57.

"No such permit shall be issued until after the applicant has filed with the town a certificate of insurance showing limits of liability equal to or exceeding the coverage carried by the town conditions substantially that the applicant shall indemnify and save harmless the town and the Town Manager and/or the Town Manager's designee and agents from all suits and actions of every name and description brought against the town, or any officer of the town for or on account of any injuries or damages received or sustained by any person in consequence of, or resulting from any work performed by the applicant, and the applicant's servants or agents, or of, or from, any negligence in guarding said work or of, or from, any act of omission of said applicant, or said applicant's servants or agents."

The current required minimum insurance amounts as specified by the Insurance Commission are as follows:

1. **Commercial General Liability Insurance**

   The Contractor shall provide Commercial General Liability insurance with a combined single limit of $1,000,000 per occurrence, $1,000,000 aggregate for bodily injury and property damage.

   The CGL shall be written on ISO occurrence form CG 00 01 10 93 (or a substitute form providing equivalent coverage) and shall cover liability arising from premises, operations, independent contractors, products-completed operations, personal injury and advertising injury, and liability assumed under an insured contract (including the tort liability of another assumed in a business contract).

2. **Commercial Automobile Liability Insurance**

   The Contractor shall provide Commercial Automobile Liability insurance with a combined single limit of $1,000,000 per occurrence, $1,000,000 aggregate, and shall include coverage for all owned, hired, and non-owned vehicles.

3. Worker's Compensation Insurance

The Contractor shall provide Worker's Compensation Insurance in the required amount as applies to the State of Connecticut and Employers Liability Insurance as follows:

- Bodily Injury by Accident - $100,000 each accident
- Bodily Injury by Disease - $500,000 policy limit
- Bodily Injury by Disease - $100,000 each employee

4. Umbrella Liability Insurance

The Contractor shall provide Commercial Umbrella Liability insurance with a combined single limit of $1,000,000 per occurrence, $1,000,000 aggregate for bodily injury and property damage.

Each Policy of Insurance shall include a waiver of subrogation in favor of the TOWN OF WINDSOR and shall provide no less than thirty (30) days notice to the TOWN OF WINDSOR in the event of a cancellation or change in conditions or amounts of coverage. The Commercial General Liability, Automobile, and Umbrella Liability shall name the TOWN OF WINDSOR as an additional insured.

Certificates of Insurance, acceptable to the TOWN OF WINDSOR shall be delivered to the TOWN OF WINDSOR prior to the commencement of the Work and kept in force throughout the term hereof.

The above insurance requirements shall also apply to all Subcontractors and the Contractor shall not allow any Subcontractor to commence work until the Subcontractor's insurance has been so obtained and approved.

E. REGULATIONS

The Developer, Contractor, and Consulting Engineer shall adhere to all applicable regulations or ordinances required for any public works or dedicated public works activity within the Town. The information contained within these standards are identified to compliment and to specify

quality standards and methods to insure all work is performed consistent with the state of the art for public improvements within the Town of Windsor.

SECTION III. DESIGN CRITERIA – PUBLIC IMPROVEMENTS

The design criteria listed within these Engineering Standards and Specifications are provided to compliment, and where applicable, expand the design requirements cited in the Town of Windsor's Subdivision Regulations and Zoning Regulations.

A. LOCAL ROAD DESIGN CRITERIA

ITEM NO.	ITEM	DESIGN STANDARD (*Where noted, Design Standard applies to roads in the Residential Zones. Professional Engineer shall use appropriate standards for roads in Industrial and Business Zones)
1	Width of Right-of-Way	50' Minimum - Residential Zone 60' Minimum - Industrial, and Business Zones
2	Width of Pavement	28' Minimum - Residential zone 34' Minimum - Industrial and Business Zones
3	Curbing • Bituminous Concrete Lip • Granite	 6" Reveal 6" Reveal, 5" Width
4	Roadway Cross-Section a. Subbase (1) on sand and gravel (2) on other soils b. Base c. Bituminous Concrete (1) binder course (2) top course d. Right-of-Way Grading (1) with sidewalks (2) without sidewalks	 ***Residential Zone Only** None required, upon approval of the Town Engineer 10" bank run gravel ***Residential Zone Only** 8" processed aggregate base ***Residential Zone Only** 2" Minimum compacted Class I 2" Minimum compacted Class II ½"/ft to walk ½"/ft for 10' minimum **NOTE:** Slopes adjacent to right-of-way shall not exceed 3:1 unless approved by the Town Engineer.

ITEM NO.	ITEM	DESIGN STANDARD (*Where noted, Design Standard applies to roads in the Residential Zones. Professional Engineer shall use appropriate standards for roads in Industrial and Business Zones)
5	Basis of Design a. Design Speed b. Gradients (1) Minimum (2) Maximum c. Cross Slope d. Pavement radius at intersections e. Other criteria for design	 ***Residential Zone Only** 35 mph. Variance required by the Town Engineer for less than 30 mph. 1%. Variance required by the Town Engineer for less than 1%. 8%. Variance required by the Town Engineer and Fire Marshal for greater than 8%. $^{3}/_{8}$"/ft 35 ft Minimum, with corner cutoffs Use AASHTO Design Manual
6	Cul-de-sac Requirements a. Length of street b. Right-of-Way radius c. Pavement radius	***Residential Zone Only** 850 ft Maximum (See Subdivision Regulations for variance). 60 ft Minimum 50 ft Minimum, with corner cutoffs
7	Drainage	Refer to Drainage Criteria Section
8	Sidewalks a. Width b. Thickness (1) Concrete, not under driveway (2) Concrete, under driveway (3) Base c. Ramps	Minimum 4000 psi Portland Cement Concrete 5 ft Minimum 5" Minimum 8" Minimum, reinforced 8" processed aggregate base Pitch: 12:1 Width: 3' Minimum Detectable Warnings Strips 8" thick reinforced Expansion joints in all walks shall be doweled
9	Bituminous Concrete Path a. Width b. Thickness (1) Bituminous Concrete (2) Base c. Ramps	Minimum Class 2 Bituminous Concrete 8 ft Minimum 2" Minimum 8" Processed aggregate base Minimum 4000 psi Portland Cement Concrete Pitch: 12:1 Width: 3' Minimum Detectable Warnings Strips 8" thick reinforced

ITEM NO.	ITEM	DESIGN STANDARD (*Where noted, Design Standard applies to roads in the Residential Zones. Professional Engineer shall use appropriate standards for roads in Industrial and Business Zones)
10A	Driveways a. Width b. Number c. Pavement d. Thickness (1) Class 2 Bituminous Concrete (2) Base	***Residential Zone Only** 10' Minimum, 18' Maximum 1 entrance per lot Required within the curb line and 20' beyond the limits of the Right-of-Way 2" Minimum 8" Processed aggregate base
10B	Driveways a. Width b. Number c. Pavement d. Thickness (1) Class 2 Bituminous Concrete (2) Class 1 Bituminous Concrete (3) Base	***Commercial Standards** 24' Minimum, 30' Maximum 1 entrance per lot Required within the curb line and 20' beyond the limits of the Right-of-Way 2" Minimum 2" Minimum 8" Processed aggregate base
11A	Street Lighting a. Fixtures b. Pole c. Spacing d. Wiring	***Residential Zone Only** 150 HPS as approved by the Town: Type III distribution. Photocell controlled. 12' Minimum on concrete base as approved by the Town 200' ± 25 feet, Minimum 3' off face of curb on sidewalk side as applicable. Lights shall be placed at intersections. 2" conduit. Service box to have circuit breaker and manual override.
11B	Street Lighting a. Fixtures b. Pole/Brackets c. Spacing d. Wiring	***Commercial Standards** GE type M-250A2 POWR/DOOR® Luminaire With Cutoff Optics or approved equal 32'-6" Minimum mounting height of fixtures on concrete base as approved by the Town 200' ± 25 feet, within median or on sidewalk side as applicable. Lights shall be placed at intersections. To be sized by developer's Engineer

ITEM NO.	ITEM	DESIGN STANDARD (*Where noted, Design Standard applies to roads in the Residential Zones. Professional Engineer shall use appropriate standards for roads in Industrial and Business Zones)
12	Guiderail	Required where sideslope exceeds 4:1, within the clear zone, or roadside hazard.
13	Pavement Marking	Epoxy resin to be used for all permanent applications.
14	Traffic Calming	See Town of Windsor Traffic Calming Manual for recommended devices, as applicable.
15	Right-of-Way Corner Cutoffs	Corner cutoffs (chords based on 25 ft minimum radius) should be provided at street intersections.
		NOTE: In addition to the general design features shown on the plans, the Consulting Engineer shall identify the location of all street lighting fixtures, conduit, control boxes, and the location and type of traffic control and street signage.

B. DRAINAGE DESIGN

(1) Purpose

Drainage systems must be designed by a Connecticut licensed Professional Engineer to collect, control, and discharge surface and subsurface water in an efficient and safe manner. These systems shall be planned and located in such a manner as to minimize the danger to life, property, and to the fullest extent possible preserve the environmental integrity of the planned development site. The Consulting Engineer shall consider the minimum standards identified in the Town's Stormwater Manual for the design of any drainage system. These drainage systems and any variances with these minimum standards are subject to approval by the Town Engineer.

Drainage systems shall be designed to eliminate the possibility of downstream flooding and impacts caused by increases in flow. In addition, the drainage system shall be designed with no increase in the peak flow discharging from the development, compared to the pre-development condition.

(2) Drainage Design Criteria

Drainage systems shall be designed in accordance with the Town's Stormwater Manual and installed with the materials and methods indicated in the Town of Windsor's Engineering Standards and Specifications, Sections V and VI, respectively. If not covered under the Engineering Standards and Specifications, drainage system design or installation shall conform to the Connecticut Department of Transportation's Standard Specifications for Roads, Bridges, and Incidental Construction, Form 816, as amended.

Drainage plan(s), a drainage report, and detail(s) shall be provided for all new or modified drainage systems. If required under the Town's Stormwater Management Ordinance, a Stormwater Management Permit application shall be provided. As a minimum, the Consulting Engineer shall include all applicable Town of Windsor standard details in the development design plans. The Town Engineer may require additional details. The drainage plan and report shall provide all information specified in the Town's Stormwater Manual.

(3) Stormwater Quality Criteria

Consulting Engineers shall consider stormwater quality and the potential impact to environmental conditions during the design of all drainage systems. Developments and drainage systems shall be designed in a manner, which significantly reduce the potential discharge of pollutants and enables groundwater recharge. The following recommendations shall be considered when designing a drainage system.

1) Catch basins located in areas with suitable soil conditions and a low water table may include infiltration holes located on the side and back walls of the basin to enable groundwater recharge.

2) Stormwater recharge and removal of pollutants through pervious parking surfaces, infiltration systems, and/or stormwater quality treatment units shall be considered for parking areas of 100 or more passenger car parking spaces, or as directed by the Town Engineer. Stormwater quality treatment units shall be

considered prior to any infiltration system or drainage discharge from parking areas with 20 or more truck spaces or as directed by the Town Engineer.

3) Detention basins may be designed as sedimentation basins for construction erosion and sedimentation control.

4) Detention basins may be designed to include infiltrator systems to promote groundwater recharge.

5) Detention basins shall be designed preferably to drain dry within 48 hours of the cessation of a storm event. If the basin will not be dry within 48 hours of the cessation of a storm event, mosquito control measures shall be implemented after consultation with the Town of Windsor, Health Department.

6) An operation and maintenance schedule shall be provided for every detention basin, stormwater quality unit, or device, which requires regular maintenance. These schedules shall include an indication of who is responsible for maintenance, the frequency of maintenance, and the maintenance procedures.

7) If deemed appropriate by the Town Engineer, curbing may be omitted and roadside vegetated swale drainage may be considered along rural roadways. Curbing shall always be provided with sidewalks, in developed areas, for road fills over four feet, and/or where gutter grades exceed five percent. In regulated wetland areas, Cape Cod curbing may be used if approved by the Town Engineer.

8) All drainage system outlets shall be properly protected with measures such as plunge pools, check dams, level spreaders, or other approved methods to reduce the potential for erosion and sedimentation.

SECTION IV. CONSTRUCTION GUIDELINES FOR PUBLIC IMPROVEMENTS

A. PURPOSE

The objective of this section is to provide the Developer, Contractor, or Consulting Engineer with basic procedures and guidelines for constructing public improvements.

B. INSPECTION

The Inspectors employed by the Town of Windsor are authorized to inspect all work performed and all materials furnished. Such inspection may extend to all or any part of the work, and to the preparation or manufacture of the materials to be used. In case of any dispute arising between the Developer/Contractor and the Inspector as to materials furnished or the manner of performing the work, the Inspector shall have the authority to reject materials or suspend the work until the question at issue can be referred to and decided by the Town Engineer. The Inspector is not authorized to alter, revoke, enlarge, relax and release any of the requirements of the approved development plans or standards contained herein, nor to approve or to accept any portion of the work, or issue instructions contrary to the approved plans. The Inspector shall in no case act as a foreman or perform other duties for the Developer/Contractor, or interfere with the management of the work being performed by the Developer/Contractor. Any advice which the Inspector may give to the Developer/Contractor shall not be construed as binding the Town in any way or releasing the Contractor from fulfillment of the requirements of the approved plans.

In the performance of the work, the Developer/Contractor shall abide by all orders, direction, or requirements of the Town Engineer involving any work associated with the public improvements where the Town at acceptance will assume a maintenance responsibility. The Town Engineer shall have the sole authority to interpret these specifications.

Where the quality of the work involving public improvements does not meet these standards and specifications, the Developer/Contractor shall cease all activity involving the questioned element of work and make appropriate repairs before proceeding with the construction activity. In cases of a dispute, the Town may ask that certification tests be performed, at the expense of

the Developer/Contractor. Where the dispute cannot be settled, the Town may seek an injunction to stop all work on the public improvements.

C. PERMITS

The Developer/Contractor shall be responsible for obtaining any and all permits required by the Town or other agencies to construct the public improvements so noted on the plans.

D. STATE OF CONNECTICUT, DEPARTMENT OF TRANSPORTATION (DOT) SPECIFICATION STANDARDS

Where specific standards or specifications are not covered within this document, DOT Form 816 (or subsequent revisions), "Standard Specifications for Roads, Bridges, and Incidental Construction", shall be utilized.

E. METROPOLITAN DISTRICT COMMISSION (MDC) STANDARDS

Where the Developer/Contractor is installing sewer or water lines for public use, MDC specifications and details shall be utilized.

F. COORDINATION OF UTILITIES

The Developer/Contractor shall make adequate provisions to allow utility work to be completed on this project as required in the development plans. The Developer/Contractor shall coordinate with the utility companies to ensure that no conflicts exist. "Call Before You Dig" (1-800-922-4455) must be notified in the area where existing utilities have been installed. The following is a list of utility companies within the Town of Windsor:

Water	MDC
Sewer	MDC
Electric	Connecticut Light & Power (CL&P)
Gas	Connecticut Natural NAs (CNG) Yankee Gas (CL&P)

Telephone	AT&T AT&T Long Lines Division
Cable Television	Comcast AT&T
Street Lighting	Town of Windsor (Local Roads) CT DOT (State Roads and Interstate Highways) CL&P (Local, State, Interstate)
Stormwater Drainage	Town of Windsor (Local Roads) CT DOT (State Roads and Interstate Highways)

G. SCHEDULE OF WORK

The Developer/Contractor shall be responsible for providing the Town with a planned schedule of work identifying the public improvements, sequence of construction, and estimated times of completion. If requested by the Town, the schedule shall be updated.

H. WORKING HOURS

The Developer/Contractor shall not perform any work that will interfere with the existing number of travel lanes, including turning lanes at intersections, on all roadways Monday through Friday between the hours of 6:30 A.M. and 8:30 A.M. and between 3:30 P.M. and 6:00 P.M.

I. SAFETY AND TRAFFIC CONTROL

The Developer/Contractor shall furnish all warning signs, barricades, detour signs, including appropriate illumination to ensure the safety of local traffic, cyclists, pedestrians, workmen, or any persons in the vicinity of a construction area and establish such warning and traffic signs as directed by the Town Engineer. All traffic patterns and signs shall conform to the Connecticut Department of Transportation Special Provision Item 0971001A - Traffic Control Plans & Typical Materials. Where work conflicts with an existing Town right-of-way, appropriate traffic control personnel shall be utilized. The Developer/Contractor shall contact the Windsor Police Department to determine if police officers are required for traffic monitoring and control. If

the Windsor police officers are to be used for the control of traffic, the Developer/Contractor shall be responsible for payment of the Windsor police officers in accordance with the Town's rules and regulations.

J. SUBMITTALS AND TESTING

To verify the quality of materials and workmanship to be utilized for public improvements ,submittals and periodic testing are required. The Developer/Contractor shall be responsible for payment for such tests. Submittals and testing requirements are outlined in the written Technical Specifications.

K. USE OF RECLAIMED MATERIALS

Notwithstanding any language to the contrary in the Technical Specifications or the Form 816, the Developer/Contractor shall NOT use any reclaimed materials from outside of the project limits. This prohibition does not apply to any reclaimed product used to produce Superpave, subject to DOT specifications.

L. SIGNS

Town owned signs, removed, damaged, or disturbed by the Developer/Contractor or any of their agents, and whether shown on the plans or not, shall be reset and placed or replaced at the Developer's/Contractor's expense.

M. DAILY CLEAN-UP

The Developer/Contractor shall be responsible for daily clean-up and removal or relocating any and all excavated materials, debris, and equipment and the like, and for temporary backfilling or filling excavations as necessary to ensure the continuous flow of traffic in roadways where work is progressing, including access to private property during non-working hours. The Developer/Contractor is responsible for a neat, orderly site and shall control dust throughout the life of the project. If requested by the Town Engineer, the Developer/Contractor shall immediately perform clean-up operations.

N. SANITARY CONDITIONS

The Developer/Contractor shall provide and maintain in a neat and sanitary condition such accommodations for the use of his employees as may be necessary to comply with the requirements and regulations of the State Department of Health or of any other bodies or tribunals having jurisdiction.

O. SURVEYS AND MONUMENTS

The Developer/Contractor, through their consulting engineer or surveyor, is responsible for furnishing all lines and grades necessary in laying out the work. If any existing Windsor highway bounds or other public or private property bounds or pins are disturbed during the construction activity, they shall be carefully replaced under the supervision of a Professional Land Surveyor, licensed in the State of Connecticut. This work shall take precedence and the highway or property bounds shall be replaced immediately at the request of the Town Engineer.

P. COLD WEATHER CONSTRUCTION

Preferably, all construction activities will occur during warm and dry weather conditions. The acceptable construction months extend from April to December. Activities occurring during winter months on any improvements intended for public use will not be permitted unless approved by the Town Engineer or his designated agent. The placing of bituminous concrete or Portland cement concrete requires special consideration or protective measures during cold or freezing weather conditions. General practice considers the placing of bituminous or Portland cement concrete when temperatures are rising above 40 Degrees Fahrenheit. Deviations may be permitted upon approval of the Town Engineer.

Q. SEQUENCE OF CONSTRUCTION

The sequence of constructing public improvements is critical in order to allow the public a safe use of roads, walks, and other incidentals associated with the approved plan. Of paramount importance is the ability of the Town to provide essential service to the residents who will

ultimately be serviced by the public improvements. Table 1 lists the recommended procedures for completing the public improvements in an expeditious manner.

R. UTILITY CUTS

Any excavation in an existing road surface shall be repaired in accordance with the Town Standard Details. In cases where trenches are parallel with the road and trench excavation exposes any portion of the pavement to greater than a 10 foot disturbance, or where three or more perpendicular trenches disturb any portion of the pavement within a 200 foot congruent section of road, the entire width of the road shall be overlaid with a 1" to 1-1/2" Class II mixture, or other surface treatment as directed by the Town Engineer. If over 50% of the road is disturbed, the entire width of the road shall be reconstructed in accordance with Town Standards.

Table 1 – Procedures for Completing Public Improvements			
ITEM NO.	**ITEM**	**ACTION/DESCRIPTION**	**RESPONSIBILITY**
1	Approval of the subdivision	Plan must be signed by chairman of TP&Z, mylars provided.	TP&Z
2	Schedule of Work	Submit a planning schedule to the Town Engineer prior to any construction activity.	Developer/Contractor
3	Pre-Construction Meeting	Schedule a pre-construction meeting with the Town Engineer prior to any construction activity.	Developer/Contractor
4	Notice to Proceed	Inform the Town Engineer in writing when construction will commence.	Developer/Contractor
5	Soil Erosion	Place all environmental controls on site as required by the Inland Wetlands and Watercourses Commission, or the Wetlands Agent.	Developer/Contractor
6	Clearing & Grubbing	Keep the site orderly and dust free; replace soil erosion protection devices as required.	Developer/Contractor
7	Utility Placement	Install all utilities as required; water/sewer, electrical. Cable TV, drainage system, gas, telephone, etc. to street line, as appropriate.	Developer/Contractor
8	Drainage Structures	Install all headwalls, rip rap, detention basins or other drainage structures required. As appropriate.	Developer/Contractor
9	Road Placement	Box and base roadway. Unstable base must be removed and replaced with suitable gravel. **Call Town Engineer for inspection. ****	Developer/Contractor
10	ROW Grading	Grade to the limits of the ROW as per standards.	Developer/Contractor
11	Road Pavement	Fine grade road and pave binder course. **Call Town Engineer for inspection. ****	Developer/Contractor
12	Curbing	Install curbing. **Call Town Engineer for inspection. ****	Developer/Contractor
13	Incidental Grading	Fine grade ROW where walks or utilities are proposed through lots. Grade, loam and seed as required. Call Town Engineer for inspection. **	Developer/Contractor

Table 1 – Procedures for Completing Public Improvements			
ITEM NO.	**ITEM**	**ACTION/DESCRIPTION**	**RESPONSIBILITY**
14	Sidewalk Connectors	Install all walks that are on existing rights-of-way or in through lots. Fine grade, loam and seed. **Call Town Engineer for inspection. ****	Developer/Contractor
15	Road Connectors	Complete all road connectors, drives, etc. that abut existing properties. Loam, seed or install plantings, as required.	Developer/Contractor
16	Plantings	Install all plantings located in cul-de-sacs or yards requiring special screenings.	Developer/Contractor
17	Signage	Order all traffic control signs and street name signs from Public Works or submit proposed signage purchases for approval.	Developer/Contractor
18	Public Improvement Interim Inspection	When the developer is ready to install house foundations an inspection of the completed work to date will be performed to determine the ability of the improvements to support limited public use.	Town Engineer, Building Official, Planning
19	Compliance	Developer/Contractor shall make all corrections to subdivision as required for limited public use.	Developer/Contractor
20	Bonding	Apply for bonding of public improvements through Planning Department. Estimate cost to be developed by the Town Engineer. (If approved, foundation permits may be issued. See note #2)	Developer/Contractor, Town Engineer, TP&Z
21	Lighting	Install all lighting fixtures, controller, conduits, and wiring required. **Call Town Engineer for inspection. ****	Developer/Contractor
22	Sidewalks	Install all walks as required. **Call Town Engineer for inspection. ****	Developer/Contractor
23	Pavement Wearing Surface	Install final road surface. **Call Town Engineer for inspection. ****	Developer/Contractor
24	Loam and Seed/Plantings	Loam and seed all areas within the ROW including the installation of all plantings.	Developer/Contractor
25	Merestones/ Iron Pins	Install all merestones and lot pins as required. Lot pins shall be installed on lots prior to occupancy.	Developer/Contractor

Table 1 – Procedures for Completing Public Improvements			
ITEM NO.	**ITEM**	**ACTION/DESCRIPTION**	**RESPONSIBILITY**
26	Incidentals	Install all fencing or other incidentals required of the approved subdivision plans.	Developer/Contractor
27	Yard Trees	Install all yard trees prior to occupancy.	Developer/Contractor
28	Acceptance Procedure	1. Clean all catch basins and drainage structures. 2. Provide as-built plans. 3. Certify all pins and merestones have been set. 4. Provide Warrantee Deed with Certificate of Title.	Developer/Contractor
29	Final Inspection	1. Complete subdivision checklist (see Appendix D). 2. Complete punch list items. 3. Request acceptance.	Developer/Contractor
30	Acceptance	1. Complete clearance sheets. 2. Prepare letter to Council for acceptance	Town Engineer, Department Head Director
31	Maintenance Bond	Apply to TP&Z for Maintenance Bond	Developer/Contractor

**** For inspection purposes, the Developer/Contractor shall call the Town Engineer at least 2 working days in advance of the inspection.**

Notes:

1. Before the Town will perform winter maintenance on unaccepted Town roads, the wearing course shall be installed. If only binder course is installed, then all structures must be at the binder grade for plowing operations.
2. If the bond is not requested, all requirements through Acceptance will be required prior to any foundation permits issued as per State Statute.

SECTION V. TECHNICAL SPECIFICATIONS

SECTION 100 – SITE PREPARATION

100 Clearing, Grubbing, and Site Preparation
105 Excavation, Placement, and Disposal of Surplus Material
110 Borrow
115 Erosion and Sedimentation Control
120 Test Pits
125 Root Control System

SECTION 200 – ROADWAY CONSTRUCTION

200 Formation of Subgrade
205 Bank Run Gravel
210 Processed Aggregate Base
215 Processed Aggregate Drives
220 Bituminous Concrete Surfaces
221 Sawcut Bituminous Concrete Pavement
225 Bituminous Concrete Sidewalks, Paths, Driveways, and Parking Areas
230 Pavement Reclamation
231 Mill Existing Pavement
235 Pavement Repair
240 Bituminous Concrete Curbing
245 Concrete Curbing
250 Granite Curbing
255 Pavement Overlay Fabric
265 Portland Cement Concrete Sidewalks and Ramps
266 Concrete Dressing and Sealer
270 Brick Pavers, Reset Brick and Various Pavers
271 Granite Belgium Block
275 Stamped Concrete Surfaces

SECTION 300 – DRAINAGE & UTILITIES

300 Drainage, Culverts, Underdrains, and Collector Piping
301 Clean Existing Drainage System
305 Catch Basins, Drainage Manholes, and Yard Drains
310 Pipe Bulkheads
320 Grade Adjustments to Utility Boxes and Gate Valves
330 Infiltration Systems

SECTION 400 – INCIDENTAL CONSTRUCTION

400 Concrete Abutments, Endwalls and Retaining Walls
405 Rip Rap
410 Dust Control
415 Loaming, Hydroseeding, and Erosion Control Matting
420 Plantings
425 Boundary Markers
430 Maintenance and Protection of Traffic

SECTION 400 – INCIDENTAL CONSTRUCTION (continued)

435 Chainlink Fence
436 Construction Fencing
440 Construction Staking
445 Pavement Markings
450 Signage
455 Street Lighting Systems

Rev. 5/10

TECHNICAL SPECIFICATION 100
CLEARING, GRUBBING, AND SITE PREPARATION

100.1 SCOPE OF WORK

This technical specification covers the furnishing of all labor, materials, testing, submittals, tools, and equipment necessary for clearing and grubbing of the project area in preparation for the construction activities described under this contract. Included in the work is the stripping, removal, and disposal of all trees, downed timber, snags, brush, vines, rubbish, stumps, logs, topsoil, bricks, existing sidewalks, concrete steps, curbing, driveways, pavement, fencing, guiderails, signs, yard drains, pipe, light fixtures, bases, old wire, and other incidentals that interfere with the planned construction. The work includes the resetting of walls, fence fabric, and poles, relocation and/or resetting of lawn sprinklers, signs, mail boxes, etc., including the installation of temporary and construction fencing, and relocation and trimming of shrubs, trees, or other plantings to remain. The work also includes the removal of winter shims placed on the binder course of bituminous concrete surfaces to protect catch basin tops, manholes, valve boxes, etc., that extend above the paved surface awaiting final surface treatment during the next construction season. Site preparation work also includes the construction, maintenance, and removal of construction site entrance pads, if shown on the plans or ordered by the Engineer.

100.2 MATERIALS

Materials used for the construction of the construction site entrance pad shall conform to the following:

A. Crushed stone, 2 inch, shall meet the requirements of Form 816, Section M.01.01.

B. Processed aggregate, when required, shall be medium gradation conforming to Technical Specification 210 – "Processed Aggregate Base".

C. Geotextiles shall meet the requirements of Form 816, Section M.08.01.26.

D. Bituminous concrete pavement, when required, shall conform to Form 816, Section M.04, Class 1.

100.3 SUBMITTALS

The following submittals shall be submitted to the Town Engineer for review and approval prior to installation:

- Gradation test results for crushed stone
- Manufacturer(s) cut sheet(s) for geotextile(s)

100.4 CONSTRUCTION METHODS

The stumps of all trees and brush, including the major root system, shall be removed in all excavation areas, under all embankments, and graded areas where the proposed finished surface is within 4 feet of the original ground. In any case where the Engineer determines that the material encountered below the finished grade is unfit for a proper foundation, the material shall be removed.

All excess material except topsoil, shall be the property of and disposed by the Contractor. Disposal areas for excess material shall be subject to approval of the Engineer.

Any topsoil to be used for the finished grading shall be stockpiled and preserved for future use in a location and manner approved by the Engineer.

In areas where certain trees and shrubs have been designated to be relocated, or to remain, or in areas adjacent to the construction activity, the Contractor shall protect this growth from damage or injury during construction. Trees shall be trimmed to provide a minimum of 8 feet of vertical clearance from the finished grade of any sidewalk constructed or repaired. In case of unavoidable damage to branches and limbs, the damaged portions shall be neatly trimmed and preserved as directed by the Engineer. Any trees or bushes that have been designated to be preserved and/or relocated and are damaged by the Contractor and are beyond recovery, shall be removed and replaced as directed by the Engineer, at the expense of the Contractor.

Construction site entrance pads shall be constructed prior to any clearing and grubbing. They shall be maintained so as to prevent tracking of dirt onto the adjacent paved roadway. The local roadways shall be swept as necessary to remove any materials that have been tracked from the site.

100.5 MEASUREMENT

Measurement for this item will be based on the area within the contract construction limits as identified on the plans and/or specifications contained herein, or as ordered by the Engineer.

100.6 PAYMENT

Payment for this item will be based on the contract Lump Sum price including all labor, materials, testing, submittals, tools, and equipment necessary to complete the work as specified. Partial payments for this item will be made based on the percentage completion of the overall work. If the contract construction limits are reduced or increased, the Town and the Contractor shall negotiate a reasonable change to the lump sum payment.

PAY ITEM	**PAY UNIT**
Clearing, Grubbing and Site Preparation	L.S.

Rev. 5/10

TECHNICAL SPECIFICATION 105
EXCAVATION, PLACEMENT, AND DISPOSAL OF SURPLUS MATERIAL

105.1 SCOPE OF WORK

This technical specification covers the furnishing of all labor, materials, testing, submittals, tools, and equipment necessary to excavate, place, form and shape slopes and other areas, and satisfactorily dispose of all materials that are within the limits of the work contracted for or as shown on the plans. Excavation under this item is intended for construction of roadways, subgrades, shoulders, slopes, entrances, retaining walls, channels, and any additional excavation necessary for, but not limited to the construction of roads, driveways, parking areas, sidewalks, concrete and granite curbing, trenches, drainage, light pole bases, and any other miscellaneous and incidental construction shown on the plans or as directed by the Engineer. Excavation and the off-site disposal of unsuitable material, boulders, concrete, and masonry walls and other structures, and concrete pavement of one or more cubic yards in size is included in this item. This item does not include the excavation and disposal of bituminous pavement, curbing, and sidewalks, all of which are included in Technical Specification 100 - "Clearing, Grubbing, and Site Preparation".

105.2 MATERIALS

Not applicable.

105.3 SUBMITTALS

Not applicable.

105.4 CONSTRUCTION METHODS

The construction methods utilized shall conform to Form 816, Section 2.02.03. Any excavated suitable material may be placed within the project limits to the lines and grades indicated on the plans, or as directed by the Engineer. All unsuitable material and excess suitable material including rock or blasted rock shall be the property of and be disposed by the Contractor. Disposal areas for excess and unsuitable material shall be subject to the approval of the Engineer.

In addition, where rock excavation requires blasting, it shall be done in accordance with the Town of Windsor ordinances, State Statutes or other pertinent regulations governing explosives and firing of blasts. Such ordinances or regulations shall not relieve the Contractor of any responsibility for damages caused by them or their employees due to the work of blasting. All blasting work must be performed or supervised by a licensed blaster who shall at all times have

a license on their person and shall permit examination thereof by the Engineer or other officials having jurisdiction.

105.5 MEASURMENT

Measurement for these items will be based on the number of cubic yards excavated in place as determined by the method of average end areas or other acceptable method of field measurements, if approved by the Engineer, or as identified by payment lines shown on the drawings or details.

Boulders, concrete, and masonry walls and other structures as well as concrete pavement of one or more cubic yards in size shall be measured in place, before removal for payment as "Rock Excavation" and before blasting as "Blasted Rock."

105.6 PAYMENT

Payment for these items will be at the contract unit price per Cubic Yard including all labor, materials, testing, submittals, tools, and equipment necessary to complete the work as specified.

PAY ITEM	**PAY UNIT**
Earth Excavation	C.Y.
Rock Excavation	C.Y.
Blasted Rock Excavation	C.Y.
Unsuitable Material Excavation	C.Y.

Rev. 5/10

TECHNICAL SPECIFICATION 110
BORROW

110.1 SCOPE OF WORK

This technical specification covers the furnishing of all labor, materials, testing, submittals, tools, and equipment necessary to properly place borrow material at all locations where shown on the drawings or as ordered by the Engineer.

110.2 MATERIALS

Al1 materials used under the title of Borrow shall conform to Form 816, Section 2.07. Recycled/reclaimed material shall not be used unless approved by the Engineer.

110.3 SUBMITTALS

The following submittals shall be submitted to the Engineer for review and approval prior to installation:

- Gradation test results for borrow

110.4 CONSTRUCTION METHODS

Borrow will be permitted only to the extent necessary to complete the embankments and similar details and only after all usable material from the excavation has been placed. With the approval of the Engineer, the Contractor may be permitted to place borrow before the excavation is completed, but will be held responsible for the proper placing of all suitable excavated material, and no payment will be allowed for any borrow placed in lieu of suitable excavated material. This permission may be revoked by the Engineer at any time if in his opinion satisfactory progress is not maintained on other operations.

The Contractor shall notify the Engineer at least 2 days prior to obtaining any borrow material, and shall provide to the Engineer all testing reports of said material from a testing laboratory certified in the State of Connecticut.

Borrow compaction, if necessary, shall be performed with equipment and by methods approved by the Engineer.

110.5 MEASUREMENT

Measurement for this item will be based on number of cubic yards compacted and accepted in place where shown on the drawings or as ordered by the Engineer.

110.6 PAYMENT

Payment for this item will be based on the contract unit price per Cubic Yard complete, compacted and accepted in place, including all labor, materials, testing, submittals, tools, and equipment necessary to complete the work as specified.

PAY ITEM	**PAY UNIT**
Borrow	C.Y.

Rev. 5/10

TECHNICAL SPECIFICATION 115
EROSION AND SEDIMENTATION CONTROL

115.1 SCOPE OF WORK

The purpose of this technical specification is to cover the furnishing of all labor, materials, testing, submittals, tools, and equipment necessary to provide, operate and maintain means and devices to minimize erosion within and adjacent to the work area and to prevent the entrance of any silt-laden water from work areas into any standing or moving bodies of water or into adjacent wetland areas, using silt fence, hay bales, hay bale backed silt fence, or silt sacks at catch basins where indicated on the plans or as ordered by the Engineer. This work includes the periodic inspection, repair, replacement, or cleanout of accumulated sediment and the removal and disposal of the system and associated surplus materials at the end of the project.

115.2 MATERIALS

Hay bales shall conform to Form 816, Section 2.18.02. Wood stakes shall be 2 inch x 2 inch x 36 inch. Geotextiles shall conform to Form 816, Sections 7.55 and M.08.01.26. Silt sacks shall be AFC Environmental Silt Sack or approved equal.

115.3 SUBMITTALS

The following submittals shall be submitted to the Engineer for review and approval prior to installation:

- Manufacturer(s) cut sheet(s) for geotextile(s)
- Manufacturer(s) cut sheet(s) for silt sacks

115.4 CONSTRUCTION METHODS

The installation, maintenance and removal of hay bales shall conform to the requirements of Form 816, Section 2.18.03. The installation, maintenance, and removal of sedimentation control devices shall conform to the requirements of Form 816, Section 2.19.03 except the use of brush as a backing for geotextile shall not be allowed. The installation, maintenance and removal of silt sacks shall conform to the manufacturer's specifications.

115.5 MEASUREMENT

Measurement for this item will be based on the actual number of linear feet of silt fence or hay bales installed and accepted. Measurements shall be along the centerline of the system, or its

components. Measurement for silt sacks at catch basins will be based on the number of units installed and accepted. Replacement systems shall not be measured for payment.

115.6 PAYMENT

Payment for this item will be based on the contract unit price per Linear Foot for hay bales and silt fence including all labor, materials, testing, submittals, tools, and equipment necessary to complete the work as specified.

PAY ITEM	**PAY UNIT**
Hay Bales	L.F.
Silt Fence	L.F.
Hay Bale backed Silt Fence	L.F.
Silt Sacks at Catch Basins	EA.

Rev. 5/10

TECHNICAL SPECIFICATION 120
TEST PITS

120.1 SCOPE OF WORK

This technical specification covers the furnishing of all labor, materials, testing, submittals, tools, and equipment necessary to perform the excavation and restoration, if required, of test pits for the purpose of locating underground utilities and investigating soil types and conditions. These test pits shall be excavated to a depth not to exceed 10 feet where shown on the drawings, or as directed by the Engineer.

120.2 MATERIALS

Where test pits have been ordered, restoration materials, as required, shall be in conformance with the applicable requirements of Technical Specifications 235 - "Pavement Repair" and 415 – "Loaming, Seeding, Hydroseeding, and Sodding".

120.3 SUBMITTALS

The following submittals shall be submitted to the Engineer for review and approval prior to installation:

- Affidavit and test report for seed mixture.

120.4 CONSTRUCTION METHODS

Restoration of test pits in paved areas shall conform to Technical Specification 235 – "Pavement Repair". Restoration of test pits in lawn areas shall conform to Technical Specification 415 – "Loaming, Seeding, Hydroseeding, and Sodding".

Where permanent restoration is not required due to impending construction activities, the area will be maintained at grade using materials necessary to provide a safe surface for pedestrian and vehicular traffic.

120.5 MEASUREMENT

Measurement for this item will be based upon the number of individual test pits completed.

120.6 PAYMENT

Payment for this item will based on the contract unit price for Each test pit completed, including all labor, material, testing, submittals, tools, and equipment necessary to complete the work as specified.

PAY ITEM	**PAY UNIT**
Test Pit with Pavement Restoration	EA.
Test Pit with Lawn Restoration	EA.
Test Pit without Restoration	EA.

Rev. 5/10

TECHNICAL SPECIFICATION 125
ROOT CONTROL SYSTEM

125.1 SCOPE OF WORK

This section covers the furnishing of all labor, materials, testing, submittals, tools, and equipment necessary to install a root control system in accordance with the details shown on the plans or as directed by the Engineer.

125.2 MATERIALS

Materials for this section shall be 12" width Typar Bio Barrier or approved equivalent.

125.3 SUBMITTALS

The following submittals shall be submitted to the Engineer for review and approval prior to installation:

- Manufacturer(s) cut sheet(s) of barrier materials

125.4 CONSTRUCTION METHODS

Using a root pruner, cut the existing roots that extend into the proposed excavation area along the drip line of the tree. Alternatively, using ditch/trench digging equipment, cut a trench 2 to 4 inches wide along the drip line. Insert Bio Barrier vertically into trench at right angles to anticipated direction of tree root growth. Use spikes, large nails, or sod staples to hold fabric in place 1 inch below surface line. All seams shall overlap at least 6 inches. Backfill and tamp in soil making sure Bio Barrier is held securely in place. Care should be taken to follow the manufacturer's directions in the proper use and handling of this material.

125.5 MEASUREMENT

Measurement for this item will be based on the number of linear feet of root control system installed and accepted in place.

125.6 PAYMENT

Payment for this item will be based on the unit price per Linear Foot of root control system including all labor, materials, testing, submittals, tools, and equipment necessary to complete the work as specified.

PAY ITEM	**PAY UNIT**
Root Control System	L.F.

Rev. 5/10

TECHNICAL SPECIFICATION 200
FORMATION OF SUBGRADE

200.1 SCOPE OF WORK

This technical specification covers the furnishing of all labor, materials, testing, submittals, tools, and equipment necessary to shape and prepare the road subgrade to the lines and grades as shown on the plans.

200.2 MATERIALS

Where ruts and holes are required to be filled to conform to the grades shown on the plan, bank run gravel which conforms to Technical Specification 205 – "Bank Run Gravel", shall be used.

200.3 SUBMITTALS

The following submittals shall be submitted to the Engineer for review and approval prior to installation:

- Gradation test results for bank run gravel

200.4 CONSTRUCTION METHODS

The subgrade shall be formed in accordance with Form 816, Section 2.09. The roadway subgrade shall be shaped to a uniformly compacted surface. Ruts and holes shall be filled with gravel and compacted. Where soft or yielding material is encountered, this unsatisfactory material as determined by the Engineer, shall be removed and the holes filled with gravel as described in Section 200.2.

200.5 MEASUREMENT

Measurement for this item will be based on the number of square yards completed and accepted in place including material necessary to shape the subgrade as described and as shown on the plans or as ordered by the Engineer. Measurements will be within the limits of construction and pay lines shown on the plans or details. Measurement for replacement of unsuitable material shall be by the cubic yard, delivered and accepted in place. The Contractor and Inspector shall measure and agree on the amount of cubic yards of replacement material.

200.6 PAYMENT

Payment for this item will be based on the contract unit price per Square Yard completed and accepted in place, including all labor, materials, testing, submittals, tools, and equipment necessary to complete the work as specified. No additional compensation for any materials required to bring the subgrade to line and grade will be considered, unless unsuitable material is encountered and is ordered to be removed by the Engineer. In this case, payment for replacement of unsuitable material will be based on the unit price per Cubic Yard of bank run gravel, per Technical Specification 205 – "Bank Run Gravel".

PAY ITEM	**PAY UNIT**
Formation of Subgrade	S.Y.

Rev. 5/10

TECHNICAL SPECIFICATION 205
BANK RUN GRAVEL

205.1 SCOPE OF WORK

This technical specification covers the furnishing of all labor, materials, testing, submittals, tools, and equipment necessary to properly place and compact gravel to correct grades at all locations where shown on the drawings or as directed by the Engineer.

205.2 MATERIALS

All materials used under this item shall conform to Form 816, Section M.02.02 and M.02.06. Reclaimed or recycled materials will not be accepted.

205.3 SUBMITTALS

The following submittals shall be submitted to the Engineer for review and approval prior to installation:

- Gradation test results for bank run gravel

205.4 CONSTRUCTION METHODS

Work under this technical specification shall conform to Form 816, Section 2.12.03.

205.5 MEASUREMENT

Measurement for this item will be based on the number of cubic yards compacted and accepted in place.

205.6 PAYMENT

Payment for this item will be based on the contract unit price per Cubic Yard, completed, compacted, and accepted in place, including all labor, materials, testing, submittals, tools, and equipment necessary to complete the work as specified.

PAY ITEM	PAY UNIT
Bank Run Gravel	C.Y.

Rev. 5/10

TECHNICAL SPECIFICATION 210
PROCESSED AGGREGATE BASE

210.1 SCOPE OF WORK

This technical specification covers the furnishing of all labor, materials, testing, submittals, tools, and equipment necessary to properly place processed aggregate to the lines, grades and compacted thickness as shown on the plans.

210.2 MATERIALS

A. Gradation

Coarse and fine aggregates shall be combined and mixed by approved methods so that the resulting material shall conform to one of the following gradation requirements as specified:

Percent Passing by Weight

Square Mesh Sieves	Medium Gradation	Coarse Gradation
2-1/4"	-	100
2″	-	95 – 100
1-1/2″	100	-
1″	90 – 100	-
3/4"	75 – 100	50 – 75
1/4"	30– 60	25 – 45
#40	10 – 25	5 – 20
#100	3 - 12	2 – 12

B. Coarse Aggregate

Coarse aggregate shall be broken stone. When tested by means of the Los Angeles Abrasion Machine, using AASHTO Method T 96, the coarse aggregate shall not have a loss of more than 50 percent. Broken stone shall consist of sound, tough, durable fragments of rock of uniform quality throughout. It shall be free from soft, disintegrated pieces, mud, dirt, organic or other injurious material.

Gravel, recycled or reclaimed material will not be accepted as an alternative for processed aggregate.

C. Fine Aggregate

The fine aggregate shall conform to Form 816, Section M.05.01-3.

210.3 SUBMITTALS

The following submittals shall be submitted to the Engineer for review and approval prior to installation:

- Gradation test results for processed aggregates

210.4 CONSTRUCTION METHODS

The processed aggregate base shall be placed in conformance with Form 816, Section 3.04.03 except that gravel, recycled or reclaimed material shall not be used.

210.5 MEASUREMENT

Measurement for this item will be based on the number of tons accepted and compacted in place.

All aggregate required for this work shall be weighed on scales certified by the State of Connecticut. Measurements shall be subject to the following provisions:

Determination of Thickness: The thickness shall be as indicated on the plans, or as ordered by the Engineer and within a tolerance of minus three-fourths of an inch (-3/4") to plus one-half inch (+1/2").

Measurements to determine the thickness will be taken by the Inspector at intervals of 500 feet or less, along lanes, and shall be considered representative of the lane. For the purpose of these measurements, a shoulder will be considered a lane.

If a thickness measurement is taken and found deficient, additional measurements will be taken as is considered necessary by the Inspector to determine the longitudinal limits of the deficiency.

The Inspector may waive an occasional measurement outside the tolerances if in his judgment it is not representative of true conditions and providing that:

(a) Other thickness measurements taken nearby for the course are within acceptable limits;
(b) Proper controls have been exercised by the Contractor; and
(c) If there would be no impairment to the serviceability of the complete construction.

No adjustment of the quantity accepted for payment will be made where the thickness does not exceed the allowable plus or minus tolerances. Where the thickness exceeds that indicated on the plans by more than the prescribed tolerance, that material which is in excess of the total planned depth, plus the tolerance, will not be included for payment.

Areas represented by measurements deficient in thickness in excess of the allowable minus deviation shall be corrected at the Contractor's expense; or with written permission of the Engineer, the deficient areas may remain, and payment will be made at an equitable adjusted price.

210.6 PAYMENT

Payment for this item will be based on the contract unit price per Ton, completed and accepted in place, including all labor, materials, testing, submittals, tools, and equipment necessary to complete the work as specified. Payment for this item will be made based on receipt of a certified weigh ticket by the Inspector at the time of delivery.

PAY ITEM	**PAY UNIT**
Processed Aggregate Base	Ton

Rev. 5/10

TECHNICAL SPECIFICATION 215
PROCESSED AGGREGATE DRIVES

215.1 SCOPE OF WORK

This technical specification covers the furnishing of all labor, materials, testing, submittals, tools, and equipment necessary to properly place processed aggregate for drives in conformance with lines, grades and compacted depths shown on the plans.

215.2 MATERIALS

All material for processed aggregate drives shall be medium gradation conforming to Technical Specification 210 – "Processed Aggregate Base". Gravel and reclaimed processed aggregate will not be accepted.

215.3 SUBMITTALS

The following submittals shall be submitted to the Engineer for review and approval prior to installation:

- Gradation test results for processed aggregate

215.4 CONSTRUCTION METHODS

The processed aggregate shall be placed in conformance with Form 816, Section 3.04.03, in 4 inch lifts, with a maximum compacted thickness of 4 inches for residential drives and 8 inches for parking areas.

215.5 MEASUREMENT

Measurement for this item will be based on the number of square yards compacted in place within the construction limits, as determined by the Engineer.

215.6 PAYMENT

Payment for this item will be based on the contract unit price per Square Yard, completed in place, including all labor, materials, testing, submittals, tools, and equipment necessary to complete the work as specified.

PAY ITEM	**PAY UNIT**
Processed Aggregate Drive (Type)	S.Y.

Rev. 5/10

TECHNICAL SPECIFICATION 220
BITUMINOUS CONCRETE SURFACES

220.1 SCOPE OF WORK

This technical specification covers the furnishing of all labor, materials, testing, submittals, tools, and equipment necessary to place bituminous concrete pavement for construction, widening, overlaying, resurfacing, reconstruction or replacement of road surfaces, to the proposed grades as shown on the drawings, typical cross sections, or as directed by the Engineer.

220.2 MATERIALS

All materials used shall conform to Form 816, Section M.04, as applicable. The job mix used for construction of roads shall be as follows:

A. The premix binder course shall be Class 4 Bituminous Concrete
B. The binder course shall be Class 1 Bituminous Concrete
C. The wear course shall be Class 2 Bituminous Concrete
D. Processed aggregate shall be coarse gradation conforming to Technical Specification 210 – "Processed Aggregate Base"

220.3 SUBMITTALS

The following submittals shall be submitted to the Engineer for review and approval prior to installation:

- Gradation test results for processed aggregate

Density testing shall be conducted during paving process and the results shall be forwarded to the Engineer.

220.4 CONSTRUCTION METHODS

The placement of the material defined in Technical Specification 220.2 shall be performed in accordance with Form 816, Section 4.06.03. The Contractor shall refer and conform to the applicable sections of Form 816 pertaining to the weather conditions permitting the placement of bituminous concrete.

Where bituminous concrete is being applied as trench placement or is being matched to an existing pavement, the placement of material shall be against a smooth and cut surface and be sealed with an asphalt joint sealer, AC-20 or approved equivalent.

Prior to the application of the bituminous concrete finish course, all work within the project shall be complete, and shall include, but not be limited to, the adjustments of frames, grates, covers, utility boxes, both public and private, as well as curbing, sweeping of the binder and/or existing pavement surfaces with the proper pickup sweeper and accessory equipment and utilizing it for the removal of earth and/or other dust producing materials from the paved surfaces to prepare them for bituminous concrete overlay and, if directed, loaming and seeding.

Sweeping of the binder course shall take place prior to paving. The Contractor will be responsible for removal and disposal of the sweepings. This disposal shall meet with the approval of the Engineer.

Tack coat application shall conform to Form 816, Section 4.06.03, with the exception that tack coat shall be applied to all vertical joints and shall be required on all surfaces that have been in place longer than 72 hours.

220.5 MEASUREMENT

Measurement for this item will be based on the net weight in tons measured in the hauling vehicles of the Contractor. Adjustments to the weights as determined from the weigh tickets will be made when the thickness is less than or greater than 1/2 inch of the specified thickness. Adjustments for material deficiencies or excesses will be in accordance with Form 816, Section 4.06.04.

220.6 PAYMENT

Payment for this item will be based on the contract unit prices per Ton for bituminous concrete and per Gallon for tack coat, completed and accepted in place including all labor, materials, testing, submittals, tools, and equipment necessary to complete the work as specified.

PAY ITEM	**PAY UNIT**
Bituminous Concrete Class ( )	Tons
Tack Coat	Gals

Rev. 5/10

TECHNICAL SPECIFICATION 221
SAWCUT BITUMINOUS CONCRETE PAVEMENT

221.1 SCOPE OF WORK

This technical specification covers the furnishing of all labor, materials, testing, submittals, tools, and equipment necessary to sawcut bituminous concrete pavement for construction activities identified on the Contract Plans or as directed by the Engineer.

221.2 MATERIALS

Not applicable.

221.3 SUBMITTALS

Not applicable.

221.4 CONSTRUCTION METHODS

Work under this item shall consist of making a sawcut where indicated on the plans. The sawcut shall be made with an approved power driven saw. The joint shall be cut to a depth as to allow for a clean finish the entire depth of the existing pavement.

221.5 MEASUREMENT

Measurement for this item will be based on the number of linear feet of cut made by an approved method to the lines delineated on the plans or as directed by the Engineer.

221.6 PAYMENT

Payment for this item will be based on the contract unit prices per Linear Foot for Sawcut Bituminous Concrete Pavement, completed and accepted including all labor, materials, testing, submittals, tools, testing, and equipment necessary to complete the work as specified.

PAY ITEM	PAY UNIT
Sawcut Bituminous Concrete Pavement	L.F.

Rev. 5/10

TECHNICAL SPECIFICATION 225
BITUMINOUS CONCRETE SIDEWALKS, PATHS, DRIVEWAYS AND PARKING AREAS

225.1 SCOPE OF WORK

This technical specification covers the furnishing of all labor, materials, testing, submittals, tools, and equipment necessary to construct bituminous concrete sidewalks, paths, parking areas and driveways in accordance with the details shown on the plans or as directed by the Engineer.

225.2 MATERIALS

Materials for the construction of sidewalks, parking areas and driveways shall conform to Form 816, Section 9.22.02, except that:

A. Binder course shall be Class 1 Bituminous Concrete

B. Wear course shall be Class 2 Bituminous Concrete

C. Base material shall be medium gradation processed aggregate base conforming to Technical Specification 210 – "Processed Aggregate Base". Reclaimed processed aggregate base will not be accepted.

D. Suitable subbase material shall be medium gradation processed aggregate base as specified in Technical Specification 210, or bank or crushed gravel meeting the applicable provisions of Form 816, Section M.02.02.1, and approved by the Engineer.

E. Tack coat material shall conform to Form 816, Section M.04.01.

225.3 SUBMITTALS

The following submittals shall be submitted to the Engineer for review and approval prior to installation:

- Gradation test results for processed aggregate
- Gradation test results for subbase material(s)

Density testing shall be conducted during paving process and the results shall be forwarded to the Engineer.

225.4 CONSTRUCTION METHODS

A. Bituminous Concrete Sidewalks and Residential Driveways:

All bituminous concrete sidewalk and residential driveway construction shall be excavated or filled 10 inches below finished grade and extended 3 inches minimum beyond the outside edges of the proposed walk, drive or bituminous concrete lip curbing (if curbing is installed). The subbase shall be properly graded to form a uniform base, and shall follow a true line and cross-section 10 inches below the finished grade of the pavement. Any material, which, in the opinion of the Engineer, is unsuitable to receive the base material, shall be excavated, removed, disposed and replaced with suitable material and compacted as approved by the Engineer. Leveling material used to fill ruts, holes or irregularities in the subbase is the responsibility of the Contractor and is considered part of this item. The base shall be 8 inches of processed aggregate base as specified and shall be compacted in two 4 inch lifts utilizing a roller weighing a minimum of 2000 pounds. Compaction shall be uniform and the surface of the base shall follow a true line and cross section 2 inches below the finish grade of the walk/drive. At any point where new pavement will match existing pavement, the existing pavement shall be saw cut vertically to a smooth edge and a tack coat shall be applied, and after placement of the pavement, the joint shall be sealed with a hot asphalt material, AC-20 or approved equivalent. Class 2 bituminous concrete shall be placed, and compacted to a depth of 2 inches using a roller weighing a minimum of 2,000 pounds.

Driveways shall be installed full width, with no cold joints, unless prior approval is granted by the Engineer to install driveways in sections. Subbase, if required, shall be placed in maximum 4 inch lifts and compacted with a minimum of 2 passes with a motor drive vibratory compactor.

B. Bituminous Concrete Parking Areas and Commercial Driveways:

All bituminous concrete parking, and commercial drive construction shall be excavated or filled 12 inches below finished grade and extended 6 inches minimum beyond the outside edges of the paved areas or 3 inches beyond bituminous concrete lip curbing (if curbing is installed). The subbase shall be properly graded to form a uniform base. Any material which, in the opinion of the Engineer, is unsuitable to receive the base material shall be excavated, removed, disposed and replaced with suitable material and compacted as approved by the Engineer. Leveling material used to fill ruts, holes or irregularities in the subbase is the responsibility of the Contractor and is considered part of this item. The base shall be 8 inches of processed aggregate base as specified and shall be compacted in two 4 inch lifts utilizing a roller weighing a minimum of 10,000 pounds. Compaction shall be uniform and the surface of the base shall follow a true line and cross section 4 inches below the finish grade. At any point where new pavement will match existing pavement, the existing pavement shall be saw cut vertically to a smooth edge and a tack coat shall be applied, and after placement of the pavement, the joint shall be sealed with a hot asphalt material, AC-20 or approved equivalent. The bituminous concrete shall be placed, and compacted in two 2 inch lifts to a depth of 4 inches using a roller

weighing a minimum of 10,000 pounds with no cold joints, unless prior approval is granted by the Engineer to install parking areas and driveways in sections. The binder course shall be placed first followed by the wear course. Tack coat will be applied between lifts as per Technical Specification 220 – "Bituminous Concrete Surfaces".

Bituminous concrete lip curbing, if installed, shall be placed on the binder course with tack coat applied.

C. Bituminous Concrete Paths:

All path construction shall be excavated or filled 10 inches below finished grade and extended 3 inches minimum beyond the outside edges of the proposed path. The subbase shall be properly graded to form a uniform base, and shall follow a true line and cross-section 10 inches below the finished grade of the pavement. Any material, which, in the opinion of the Engineer, is unsuitable to receive the base material, shall be excavated, removed, disposed and replaced with suitable material and compacted as approved by the Engineer. Leveling material used to fill ruts, holes or irregularities in the subbase is the responsibility of the Contractor and is considered part of this item. The base shall be a minimum of 8 inches of processed aggregate base as specified and shall be compacted in two 4 inch lifts utilizing a roller weighing a minimum of 2000 pounds. Compaction shall be uniform and the surface of the base shall follow a true line and cross section 2 inches below the finish grade of the path. At any point where new pavement will match existing pavement, the existing pavement shall be saw cut vertically to a smooth edge and a tack coat shall be applied, and after placement of the pavement, the joint shall be sealed with a hot asphalt material, AC-20 or approved equivalent. Class 2 bituminous concrete shall be placed, and compacted to a depth of 2 inches using a roller weighing a minimum of 2,000 pounds.

Paths shall be installed full width, with no cold joints, unless prior approval is granted by the Engineer to install driveways in sections. Subbase, if required, shall be placed in maximum 4 inch lifts and compacted with a minimum of 2 passes with a motor drive vibratory compactor.

225.5 MEASUREMENT

Measurement for this item will be based on the number of square yards completed and accepted in place. This area shall include the area under and beyond the back of the bituminous concrete lip curbing. Tack coat shall be measured for payment by the number of gallons used and accepted.

225.6 PAYMENT

Payment for this item will be based on the contract unit price per Square Yard (or Gallon for tack coat) including all labor, materials, testing, submittals, tools, and equipment necessary to complete the work as specified. All excavation up to 12" deep shall be considered part of this item. Payment for the excavation, removal, disposal and replacement of unsuitable material shall be per Technical Specification 105 – "Excavation, Placement, and Disposal of Surplus Material".

PAY ITEM	**PAY UNIT**
Bituminous Concrete Sidewalks and Residential Driveways	S.Y.
Bituminous Concrete Parking Areas and Commercial Driveways	S.Y.
Bituminous Concrete Paths	S.Y.
Tack Coat	Gals

Rev. 5/10

TECHNICAL SPECIFICATION 230
PAVEMENT RECLAMATION

230.1 SCOPE OF WORK

This technical specification covers the furnishing of all labor, materials, testing, submittals, tools, and equipment necessary to reclaim bituminous roadways, as specified below, to form an asphaltic stabilized base.

Work under this item shall consist of pulverizing the in-place asphalt pavement and underlying material, spraying liquid calcium chloride on the pulverized mass, mixing and/or blending the material, spreading it, adding water as necessary, shaping and compacting the resultant mixture to lines and grades shown on the plans, ready to accept the bituminous concrete pavement. This work does not include the reclamation of bituminous curbing. If the curbing is to be replaced as part of the project, the removal and disposal shall be accomplished prior to the reclamation of the pavement and shall be a separate pay item.

230.2 MATERIALS

A. Reclaimed Base

All pulverized material shall pass the 3-inch sieve and shall meet the following gradation:

Required Reclaimed Base Gradation*

SIEVE SIZE	% PASSING
3″	100
1-1/2″	70-100
3/4″	55-90
#4	40-75
#40	10-30
#200	3-10
Residual A.C.	2-4

*Gradation may vary due to local aggregate conditions

B. Liquid Calcium Chloride

The calcium chloride solution shall be provided by the manufacturer as a true solution and shall not be reconstituted from flake calcium chloride. The calcium shall meet the following material specifications (see ASTM Designation D98: AASHTO-M144).

Calcium Chloride	35 % ± 1 %
Alkali Chloride as NaCl	2 %
Magnesium as MgC1	0.1 %
Typical : (in lbs. per gallon)	
Calcium Chloride	5.05
Sodium Chloride	0.2
Magnesium Chloride	0.004
Calcium Sulfate	0.004
Water	6.002
	11.26

C. Processed Aggregate

All processed aggregate which is added to the pulverized roadway material shall conform to Technical Specification 210 – "Processed Aggregate Base" (coarse gradation) as directed by the Engineer.

230.3 SUBMITTALS

The following submittals shall be submitted to the Engineer for review and approval prior to installation:

- Gradation test results for reclaimed base material
- Material certification for calcium chloride
- Gradation test results for processed aggregate

230.4 CONSTRUCTION METHODS

The existing road pavement shall be pulverized and mixed with the base course material existing in the roadway to a depth of 12 inches, or as directed by the Engineer. The pulverization shall blend the asphalt and base material into a homogeneous mass, utilizing the asphalt acquired from the existing pavement as a stabilizer which shall bond the material together when compacted. After the first pulverization, two applications of calcium chloride totaling .75 gallons per square yard shall be applied. The aggregate mass shall then be pulverized again to ensure proper asphalt, gravel and calcium chloride blending to a depth of 12 inches, or as directed by the Engineer. Initial rolling shall be done immediately following the second reclaimed pass. If additional fines are required the Contractor may be directed to add processed aggregate base. Water shall be applied during the entire operation to ensure optimum moisture at the time of compaction. After the material has been thoroughly worked as described above it shall be shaped and graded to the lines and elevations as indicated on the

plans or as directed by the Engineer. A final application of calcium chloride of .25 gallons per square yard shall be applied after the reclaimed base material is fine graded, and prior to the paving.

During construction the Contractor shall sample materials from the project area and test for material gradation. The Contractor shall continue the reclamation until the sampled materials pass the gradation requirements of Section 230.2, or acceptable to the Engineer.

The Contractor shall be responsible for coordinating work with utility companies to locate, identify and mark all utility structures as necessary. The Contractor must not damage any existing manholes, catch basins, valve boxes or other castings which may be located in the surface of the road. Any damage to these structures shall be repaired by the Contractor at the Contractor's expense.

The work shall be constructed on no more than 1/2 the roadway width at any time to allow for the passage of through traffic. Access to properties within the project limits is to be provided as necessary. Maintenance and protection of traffic, dust control and daily clean-up throughout the project area shall be the responsibility of the Contractor.

If paving is not to be done immediately following the reclamation, then the pulverized mass, after the second reclaiming pass, shall be rolled, shaped and rough graded to allow passage of emergency vehicles and the traveling public, as approved by the Engineer.

It is the Contractor's responsibility to coordinate the fine grading and final application of calcium chloride with the paving contractor.

Equipment Requirements:

Reclamation will be by means of a traveling rotary reclaimer or equivalent machine capable of cutting through the existing asphalt at depths up to 12 inches with one pass. The machine shall be self-propelled and equipped with an adjustable grading blade thus leaving its path generally smooth for traffic. Equipment such as road planers or cold milling machines, which are designed to mill or shred the existing bituminous concrete rather than to crush or fracture it, are not considered capable of achieving specification gradation. The required and necessary action of the reclaimer will increase the percentages of fine aggregate. This machine is not intended for use on subbases with large boulders or ledge. Existing bituminous concrete and gravel/aggregate base must be pulverized and mixed so as to form a homogeneous mass of uniformly processed base material, which will bond together when compacted.

The distributor for calcium chloride shall be capable of applying liquid calcium chloride in accurately measured quantities at any rate between 0.1 to 2.0 gallons per square yard of roadway surface at any length of spray bar up to 20 feet. The distributor shall be capable of maintaining a uniform rate of distribution of material regardless of change in grade, width or

direction of the road. The distributor shall be equipped with a Digital Volumetric Accumulator capable of measuring gallons applied and distance traveled. The volume and measuring device shall be equipped with a power unit for the pump so that application is by pressure, not gravity. The spray nozzles and pressure system shall provide a sufficient and uniform fan-shaped spray of material throughout the entire length of the spray bar at all times while operating, and shall be adjustable laterally and vertically. The spray shall completely cover the roadway surface receiving the treatment. Any puddling of the calcium chloride shall be removed prior to paving.

At least one vibratory roller shall be used on each reclaimed surface, and shall have a compacting width of not less than 5 feet. Each roller shall have a gross weight of not less than 15 tons.

230.5 MEASUREMENT

Measurement for this item will be based on the number of square yards reclaimed, placed, graded, compacted, tested and accepted to the limits shown on the plans and accepted by the Engineer.

230.6 PAYMENT

Payment for this item will be based on the contract unit price per Square Yard, completed and accepted in place, including all labor, materials, testing, submittals, tools, and equipment necessary to complete the work as specified.

PAY ITEM	**PAY UNIT**
Pavement Reclamation	S.Y.

Rev. 5/10

TECHNICAL SPECIFICATION 231
MILL EXISTING PAVEMENT

231.1 SCOPE OF WORK

This technical specification covers the furnishing of all labor, materials, testing, submittals, tools, and equipment necessary to perform the milling, removal and disposal of existing bituminous concrete pavement when milling a tapered "keyway" to transition the top course of a bituminous concrete overlay to an existing pavement surface.

Work under this item shall consist of milling and removal of material to the line, grade, and typical cross-section shown on the plans or as specified by the Engineer.

Unless otherwise specified, the milled material shall become the property of the Contractor.

231.2 EQUIPMENT

The equipment for milling the pavement surface shall be designed and built for milling flexible pavements and shall have a minimum 6 foot cutting width. It shall be self propelled with sufficient power, traction, and stability to maintain depth and slope and shall be capable of removing the existing bituminous concrete pavement to the line, grade, and typical cross-section shown on the plans.

The milling machine shall be equipped with a built in automatic grade control system that can control the longitudinal profile and the transverse cross-slope to produce the specified results. The longitudinal controls shall be capable of operating from any longitudinal grade reference, including string line, ski (30 feet minimum), mobile string line (30 foot minimum), or matching shoe. The transverse controls shall have an automatic system for controlling cross-slope at a given rate.

The machine shall be capable of operating at a minimum speed of 10 feet per minute and be able to provide a 0 to 3 inch deep cut (minimum) in one pass. It shall be designed so that the operator can at all times observe the milling operation without leaving the control area of the machine.

The teeth on the revolving cutting drum must be continually maintained and shall be replaced as warranted to provide a uniform pavement texture.

The machine shall be equipped with an integral pickup and conveying device to immediately remove material being milled from the surface of the roadway and discharge the millings into a truck, all in one operation. The machine shall also be equipped with a means of effectively

limiting the amount of dust escaping from the milling and removal operation in accordance with local, State, and Federal air pollution control laws and regulations.

When milling smaller areas or areas where it is impractical to use the above described equipment, the use of a smaller or lesser equipped milling machine may be permitted when approved by the Engineer.

A sweeper equipped with a water tank, spray assembly to control dust, a pick-up broom, a dual gutter broom, and a dirt hopper shall be provided by the Contractor. The sweeper shall be capable of removing millings and loose debris from the textured pavement. Other sweeping equipment may be provided in lieu of the sweeper when approved by the Engineer.

231.3 SUBMITTALS

Not applicable.

231.4 CONSTRUCTION METHODS

The milled surface shall provide a satisfactory riding surface with a uniform textured appearance. The milled surface shall be free from gouges, excessive longitudinal grooves and ridges, oil film, and other imperfections that are a result of defective equipment, improper use of equipment, or poor workmanship. Any unsatisfactory surfaces produced are the responsibility of the Contractor and shall be corrected at the Contractor's expense and to the satisfaction of the Engineer.

Unless otherwise specified, milling shall be done to improve rideability and/or cross-slope. The existing pavement shall be removed to the average depth shown on the plans, in a manner that will restore the pavement surface to a uniform cross-section and longitudinal profile. The longitudinal profile of the milled surface shall be established by a stringline, mobile stringline, or mobile ski. The cross-slope of the milled surface shall be established by a second sensing device or by an automatic cross-slope control mechanism. The Contractor will be responsible for providing all grades necessary to remove the material to the proper line, grade, and typical cross-section shown on the plans. The Engineer may waive the requirement for automatic grade or slope controls where the situation warrants such action.

Protection shall be provided around existing catch basin inlets, manholes, utility valve boxes, and any similar structures. Any damage to such structures as a result of the milling operation is the Contractor's responsibility and shall be repaired at the Contractor's expense.

To prevent the infiltration of milled material into the storm sewer system the Contractor shall take special care to prevent the milled material from falling into the inlet openings or inlet grates. Any milled material that has fallen into inlet openings or inlet grates shall be removed at the Contractor's expense.

At all permanent limits of milling, a clean vertical face shall be established prior to paving. No vertical faces, transverse or longitudinal, shall be left exposed to traffic. If any vertical face is formed in an area exposed to traffic a temporary paved transition shall be established. If a vertical face is not formed and the milling machine is used to temporarily transition the milled pavement surface to the existing pavement surface, the length of the temporary transition shall conform to the below requirements.

Transitions for Roadway Surface: Transitions shall be formed at any point on the roadway where the pavement surface deviates, vertically, from the uniform longitudinal profile as specified on the plans. Whether formed by milling or by bituminous concrete mixture, all transition lengths shall conform to the criteria below unless otherwise specified.

Permanent Transitions: A permanent transition is defined as any transition that remains as a permanent part of the work. All permanent transitions, leading and trailing ends shall meet the following length requirements:

a) Roadways greater than 35 MPH = 30 feet per inch of vertical change (thickness)
b) Roadways 35 MPH or less = 15 feet per inch of vertical change (thickness).
c) Bridge Overpass and underpass transition length will be 75 feet either
    (1) Before and after the bridge expansion joint, or
    (2) Before or after the parapet face of the overpass.

In areas where it is impractical to use the above described permanent transition lengths the use of a shorter permanent transition length may be permitted when approved by the Engineer.

Temporary Transitions: A temporary transition is defined as a transition that does not remain a permanent part of the work. All temporary transitions shall meet the following length requirements:

a) Roadways greater than 35 MPH
    (1) Leading Transitions = 15 feet per inch of vertical change (thickness)
    (2) Trailing Transitions = 6 feet per inch of vertical change (thickness)
b) Roadways 35 MPH or less
    (1) Leading and Trailing = 4 feet per inch of vertical change (thickness)

Note: Any temporary transition to be in-place over the winter shutdown period, holidays, or during extended periods of inactivity (more than 7 calendar days) shall conform to the "Permanent Transition" requirements shown above.

Prior to opening an area which has been milled to traffic, the pavement shall be thoroughly swept with a sweeper or other approved equipment to remove, to the greatest extent practicable, material which will become airborne under traffic. This operation shall be

conducted in a manner so as to minimize the potential for creation of a traffic hazard and to comply with local, State, and Federal air pollution control laws and regulations. Any damage done to traffic as a result of milled material becoming airborne is the responsibility of the Contractor and shall be repaired at the Contractor's expense.

The milled surface will be tested with a 10 foot straightedge furnished by the Contractor. The variation of the top of ridges from the testing edge of the straightedge, between any two ridge contact points. The variation of the top of any ridge from the bottom of the groove adjacent to that ridge shall not exceed one quarter (¼) of an inch in ten (10) feet in any direction in preparation for placing a final wearing surface, or three eighths (3/8) of an inch for an intermediate course. Any point in the surface not meeting these requirements shall be corrected as directed by the Engineer at the Contractor's expense.

The Contractor may be waived of the straightedge surface requirements stated in the preceding paragraph in areas where a surface lamination between bituminous concrete layers or a surface lamination of bituminous concrete on Portland cement concrete causes a non-uniform texture to occur. This is subject to the approval of the Engineer.

The length of the milled tapered "keyway" transition shall conform to the requirements above.

231.5 MEASUREMENT

Measurement for this item will be based on the number of square yards of area from which the milling of asphalt has been completed and accepted to the limits shown on the plans and accepted by the Engineer.

231.6 PAYMENT

Payment for this item will be based on the contract unit price per Square Yard, completed and accepted, including all labor, materials, testing, submittals, tools, and equipment necessary to complete the work as specified.

PAY ITEM	**PAY UNIT**
Mill Existing Pavement	S.Y.

Rev. 5/10

TECHNICAL SPECIFICATION 235
PAVEMENT REPAIR

235.1 SCOPE OF WORK

This technical specification covers the furnishing of all labor, materials, testing, submittals, tools and equipment necessary to perform pavement repair including saw cutting, excavation, removal and disposal of existing pavement and base material and installation of processed aggregate base and bituminous concrete, tack coat and joint sealant, to depths as shown on the plans.

235.2 MATERIALS

Processed aggregate base shall be medium gradation conforming to Technical Specification 210 – "Processed Aggregate Base". Gravel and reclaimed process aggregate base shall not be accepted.

Bituminous concrete materials used shall conform to Form 816, Section M.04, as applicable and shall be as follows:

A. The binder course shall be Class 1 bituminous concrete
B. The wear course shall be Class 2 bituminous concrete
C. Tack coat
D. Joint sealer shall be AC-20 or approved equal

Hot-applied pavement markings shall conform to Form 816, Section M.07.21.

Epoxy resin pavement markings shall conform to Form 816, Section M.07.22.

235.3 SUBMITTALS

The following submittals shall be submitted to the Engineer for review and approval prior to installation:

- Gradation test result for processed aggregate
- Certified test report and material certification for pavement markings

235.4 CONSTRUCTION METHODS

Saw cuts shall be made no less than 18 inches back from the edges of the excavation on the pavement.

Processed aggregate base, medium graduation, shall be placed in conformance with Technical Specification 210 in lifts with a maximum compacted thickness of 4 inches. Processed aggregate base shall be applied to a total compacted minimum depth of 8 inches. If the depth of the existing base is greater than 8 inches, processed aggregate should be placed in 4" lifts to match existing depth. Suitable backfill and processed aggregate base materials shall be compacted to 95 % per AASHTO T-180 Method D.

The placement of the bituminous concrete materials shall be performed in accordance with Technical Specification 220 – "Bituminous Concrete Surfaces". Unless otherwise shown on the plans or directed by the Engineer, the binder course shall be applied and compacted to a minimum thickness of 2 inches, or to a thickness of the existing pavement, less 2 inches. The finish course shall be placed and compacted to a thickness of 2 inches. The Contractor shall refer and conform to Form 816, Section 4.06 pertaining to the weather conditions permitting the placement of bituminous concrete. Further, where bituminous concrete is being applied as trench placement or is being matched to an existing roadway, the existing roadway shall be saw cut to meet the new material, a tack coat shall be applied as per Technical Specification 220 and the joint shall be sealed with hot asphalt material, all considered as part of this item.

If greater than 5 linear feet of existing pavement marking (centerlines, lane lines, shoulder lines) has been removed then the pavement markings should be replaced with either hot-applied or epoxy resin pavement markings (white or yellow as appropriate), to match existing conditions, in accordance with Form 816, Section 12.09 or 12.10 as applicable. Structures such as catch basins, manhole covers, and other movable/repositionable objects within the roadway should not be marked.

235.5 MEASUREMENT

Measurement for this item will be based on the number of square yards of pavement repairs completed and accepted in place.

235.6 PAYMENT

Payment for this item will be based on the contract unit price per Square Yard completed and accepted in place, including all labor, materials, testing, submittals, tools, and equipment necessary to complete the work as specified.

PAY ITEM	**PAY UNIT**
Pavement Repair	S.Y.

Rev. 5/10

TECHNICAL SPECIFICATION 240
BITUMINOUS CONCRETE CURBING

240.1 SCOPE OF WORK

This technical specification covers the furnishing of all labor, materials, testing, submittals, tools, and equipment necessary to construct and place machine formed bituminous concrete lip curbing, bituminous concrete flat top curb, or bituminous concrete Cape Cod curbing in accordance with the dimensions and details as shown on the plans or as directed by the Engineer.

240.2 MATERIALS

Materials, including tack coat, for the work shall conform to the requirements of Form 816, Section M.04, Bituminous Class 3.

240.3 SUBMITTALS

Not applicable.

240.4 CONSTRUCTION METHODS

The bituminous concrete curbing shall be placed in accordance with Form 816, Section 8.15.03. In new construction, it shall be placed on the binder course. Prior to the placement of the bituminous concrete curbing, the area shall be cleaned of all loose and foreign materials, and a tack coat shall be applied.

240.5 MEASUREMENT

Measurement for this item will be based on the number of linear feet of specified bituminous concrete curbing placed and accepted.

240.6 PAYMENT

Payment for this item will be based the contract unit price per Linear Foot complete and accepted in place, including all labor, materials, testing, submittals, tools, and equipment necessary to complete the work as specified.

PAY ITEM	PAY UNIT
Bituminous Concrete (Type) Curb	L.F.

Rev. 5/10

TECHNICAL SPECIFICATION 245
CONCRETE CURBING

245.1 SCOPE OF WORK

This technical specification covers the furnishing of all labor, materials, testing, submittals, tools, and equipment necessary to construct and place concrete curbing on a prepared base, in accordance with the dimensions and details as shown on the plans or as directed by the Engineer.

245.2 MATERIALS

Materials shall conform to Form 816, Section 8.11.02.

Processed aggregate shall be medium gradation conforming to Technical Specification 210 – "Processed Aggregate Base".

245.3 SUBMITTALS

The following submittals shall be submitted to the Engineer for review and approval prior to installation:

- Concrete specifications from supplier
- Material certifications for all pre-cast concrete
- Gradation test results for processed aggregate

245.4 CONSTRUCTION METHODS

Concrete curbing shall be placed in accordance with Form 816, Section 8.11.03.

245.5 MEASUREMENT

Measurement for this item will be based on the number of linear feet of concrete curbing placed and accepted.

245.6 PAYMENT

Payment for this item will be based on the contract unit price per Linear Foot completed in place, including all labor, materials, testing, submittals, tools, and equipment necessary to complete the work as specified.

PAY ITEM	**PAY UNIT**
Concrete Curbing (Type)	L.F.

Rev. 5/10

TECHNICAL SPECIFICATION 250
GRANITE CURBING

250.1 SCOPE OF WORK

This technical specification covers the furnishing of all labor, materials, testing, submittals, tools, and equipment necessary to place approved granite curbing on a stable, prepared base in accordance with the dimensions and details as shown on the plans or as directed by the Engineer.

250.2 MATERIALS

Granite curb shall conform to the requirements of Form 816, Section M.12.06.1.

Processed aggregate shall conform to Technical Specification 210 – "Processed Aggregate Base" (medium gradation).

Class "C" concrete shall meet the requirements of Form 816, Section M.03.01.

Mortar shall meet the requirements of Form 816, Section M.11.04.

250.3 SUBMITTALS

The following submittals shall be submitted to the Engineer for review and approval prior to installation:

- Gradation test results for processed aggregate
- Concrete specifications from supplier
- Manufacturer's cut sheet for mortar indicating material is AASHTO M-85 compliant

250.4 CONSTRUCTION METHODS

Installation of curbing shall conform to the details included in the plans and the requirements of Form 816, Section 8.13.03.2. Excavation shall be to a depth of 12 inches below the bottom of the proposed curbing and a minimum of 12 inches wide for straight sections, and 27 inches wide for curved sections. Processed aggregate shall be used as a bedding material under and around the granite curbing as shown on the plans or details and shall be installed in no more than 6 inch lifts, each lift compacted to a firm even surface. Concrete shall be used as backing of joints for straight granite curbing sections and as bedding and backing of joints for the curved granite curbing as shown on the plans or details.

250.5 MEASUREMENT

Measurement for this item will be based on the number of linear feet of granite curbing and curved granite curbing in place and accepted.

250.6 PAYMENT

Payment for this item will be based on the contract unit price per Linear Foot completed and accepted in place, including all labor, materials, testing, submittals, tools, and equipment necessary to complete the work as specified.

PAY ITEM	**PAY UNIT**
Granite Curbing	L.F.
Curved Granite Curbing	L.F.

Rev. 5/10

TECHNICAL SPECIFICATION 255
PAVEMENT OVERLAY FABRIC

255.1 SCOPE OF WORK

This technical specification covers the labor, materials, testing, submittals, tools, and equipment to furnish and install pavement overlay fabric in accordance with these specifications and manufacturer's recommendations on a pavement surface ready to accept this application.

255.2 MATERIALS AND EQUIPMENT

A. Fabric:

Fabric shall be a needle punched, non-woven polypropylene fabric meeting the following specifications:

	Typical	Minimum
Weight, oz / sq. yd.	4.6	3.6
Tensile Strength, lbs. (1)	120	90
Elongation-at-Break, % (1)	65	50
Bituminous Retention, gals / sq. yd.	--	0.20
Color	Black	
Width, inches	150	
Length / Roll, yds.	100	

(1) ASTM Method D-4632, Heat Bonded one-sided

B. Tack Coat:

Tack coat shall conform to Form 816, Section M.04.01.

C. Bituminous Distributor:

The distributor must be suitably metered and capable of spraying the bituminous sealant at a prescribed uniform application rate. No puddles of sealant shall be allowed to form on the surface and there shall be no skipped areas. The Engineer may require satisfactory test applications at an off-site area to insure proper equipment performance. The distributor should be equipped with a single nozzle hand spray and a positive shut-off valve.

D. Fabric Laydown Equipment:

Mechanical laydown equipment must be capable of handling full rolls of fabric, and shall be capable of laying the fabric smoothly, without excessive wrinkles and/or folds. When manual laydown is required, a length of standard 1 inch pipe, together with suitable roll tension devices, are required for proper roll handling.

255.3 SUBMITTALS

The following submittals shall be submitted to the Engineer for review and approval prior to installation:

- Manufacturer's cut sheet for fabric

255.4 CONSTRUCTION METHODS

A. Surface Preparation:

The surface on which the fabric is to be placed should be free of dirt, water and vegetation.

B. Tack Coat Application:

The tack coat must be uniformly spray applied at the rate recommended by the manufacturer. The quantity specified will vary with the surface condition of the existing pavement, but will normally be applied at the rate of 0.25 to 0.30 gallons per square yard (gsy) residual bituminous. At least 0.20 gsy residual bituminous, under heat of the applied overlay, is absorbed by the fabric alone. Within street intersections or other zones where vehicle speed change is commonplace, reduce the prescribed application rate by 20 percent.

Application will be by distributor equipment wherever possible, with hand spraying kept to a minimum. Temperature of the bituminous must be sufficiently high to permit a uniform spray pattern. For bituminous cements, the minimum recommended temperature is 290° F. (NOTE: If the fabric is oversprayed, distributor tank temperatures should not exceed 325°F to avoid damage to the fabric).

The target width of the bituminous sealant application should be the fabric width plus a minimum of 6 inches on each side. Any excess bituminous sealant shall be cleaned from the road surface to avoid flushing and possible fabric movement at these bituminous-rich areas.

The quantity of bituminous applied to the fabric is extremely important. The object is to fully seal the membrane, but not to use an excessive quantity, which might cause a slippage plane.

Bituminous sprayed over the fabric should be confined to the fabric area. Excess bituminous applied outside this area may cause bleeding.

C. Fabric Placement:

The fabric shall be placed into the tack coat with a minimum amount of wrinkles prior to the time the bituminous has cooled and lost tackiness. The fabric is unrolled so that the bearded (fuzzy) side is unwound into the sealant, thus providing optimum bond between fabric and pavement during the construction process.

As directed by the Engineer, wrinkles severe enough to cause "folds" shall be slit and layed flat. Brooming will maximize fabric contact with the pavement surface. Small wrinkles, which flatten under compaction, are not detrimental to performance.

Overlap of fabric joints should be 6 inches to ensure full closure of the joint. Transverse joints should be "shingled" in the direction of paving to prevent edge pick-up by the paver. As directed by the Engineer, additional sealant of about 0.20 gsy shall be applied to fabric joint.

> Placement of the bituminous concrete overlay (which is not a part of this Pay Item) should closely follow fabric laydown. In the event that the sealant bleeds through the fabric before the hot mix is placed, it may be necessary to blot the sealant by spreading sand or hot mix over the affected areas. This will prevent any tendency for construction equipment to pick up the fabric when driving over it.

D. Ambient Temperatures:

Air temperatures during fabric installation should be greater than 50°F to allow adequate tack from the bituminous sealant to hold the fabric in place. At drains, manholes, watergates, or other pavement penetrations, the fabric can be placed over the opening and excess fabric shall be cut and removed within 2 inches of the opening.

E. Clean Up:

The Contractor shall be responsible for clean up and disposal of all waste materials. All waste or excess materials shall be cleaned up daily and removed from the site.

255.5 MEASUREMENT

Measurement for this item will be based on the number of square yards of pavement surface of fabric completed in place and accepted.

255.6 PAYMENT

Payment for this item will be based on the contract unit price per Square Yard, completed, in place, including all labor, materials, testing, submittals, tools, and equipment necessary to complete the work as specified.

PAY ITEM	**PAY UNIT**
Pavement Overlay Fabric	S.Y.

Rev. 5/10

TECHNICAL SPECIFICATION 265
PORTLAND CEMENT CONCRETE SIDEWALKS AND RAMPS

265.1 SCOPE OF WORK

This technical specification includes the furnishing of labor, materials, testing, submittals, tools, and equipment necessary to replace or construct Portland Cement Concrete sidewalks, drill for and install steel dowels, and construct driveway ramps and sidewalk ramps with detectable warning strips. Prior to the installation of the concrete, all work within the sidewalk limits shall be complete and shall include, but not be limited to, the adjustments of all public and private frames, grates, covers, and utility boxes.

265.2 MATERIALS

A. Base Material:

Base material shall be medium gradation processed aggregate base conforming to Technical Specifications 210 – "Processed Aggregate Base".

B. Portland Cement Concrete:

All Portland Cement Concrete shall conform to the following specifications:

All concrete used shall be proportioned by weight for one cubic yard as follows:

Cement (7 sacks)	658 lbs.
Sand	1,244 lbs.
3/8" crushed stone	700 lbs.
3/4" crushed stone	1,080 lbs.
Water	34 gals.
Darex II (A.E.A.)	3.29 oz.
Air Entrainment	5-7 percent
Slump	3 inches (max.)
Strength (28 day)	4,000 PSI (min.)

The proportions listed are based on the weight of cement and surface dry aggregates with a bulk specific gravity of 2.65 for sand with a fineness modulus of 2.70 and trap rock with a specific gravity of 2.90.

Portland Cement shall be Type II or IIA and shall comply with AASHTO M-85. Type III or IIIA may not be used except as directed by the Engineer for special conditions. All cements must meet requirements of ASTM C-150. Should air entraining cement be used, it must be capable of producing entrained air within the specified limits without air entraining admixtures.

The air entraining agent used shall be of the vinsol resin type and shall conform to Form 816, Sections M.03.01-9, Admixtures, and M.03.01-9(a), Air-Entraining Admixtures. The air entraining agent shall be added to the mixing water prior to its addition to the mix, for non air entrained cement mixes only. Air entraining agent may not be used with air entrained cement.

All Portland Cement Concrete used shall be "ready-mixed concrete", (Portland Cement Concrete manufactured for delivery to a purchaser in a plastic state and delivered to the job site suitably mixed for placing in the work). Ready-mixed concrete shall be either (1) mixed completely at a central mix plant and transported to the job in a truck mixer operating at agitator speed or (2) mixed completely in a truck mixer while in transit or at the point of delivery. Ready-mixed concrete shall be obtained from suppliers approved by the Inspector. Batching equipment, stationary mixes and truck mixers shall conform to the requirements of Form 816, Section 4.01.03(C, D & E) and Section 6.01.03(1), as applicable, and be in good condition and operated as designated by the manufacturer. The concrete shall be discharged at the site of the work in a thoroughly mixed and uniform mass of the consistency and workability required without the use of additional mixing water. The slump of the concrete at and during discharge at the work shall be three (3) inches or less.

As determined in accordance with AASHTO T-119, discharge of the batch shall be complete within one (1) hour of the addition of water to the mix. Concrete delivered in outdoor temperatures lower than 40° F shall be discharged at the work site having a temperature not less than 60° F nor greater than 90° F. Every load of concrete delivered to the job site shall have a ticket clearly marked indicating the proportionment of the batch and stamped by a time clock indicating the time the batch was placed in the truck mixer. This ticket shall be presented to the Inspector on the job prior to beginning discharge. Additional water for tempering will be added to the mix only on direction of the Inspector. The concrete supplier shall guarantee proper frequency of delivery to allow conformance with placing requirements of these specifications. Failure to conform with all the requirements of this technical specification will result in the rejection of the nonconforming load(s). Rejected loads that have been "doctored up" will not be accepted. Repeated failure of a supplier to conform to these specifications will result in loss of approval by the Engineer as an approved source of material for construction within the Town.

C. <u>Premolded Joint Material:</u>

Premolded joint material shall be Kork Pak, Proflex Reflex or equivalent approved by the Engineer.

D. Curing Materials:

Waterproof paper shall be double sheet, bituminous cemented Kraft Paper, reinforced in both directions and conforming to the requirements of AASHTO M-139.

Polyethylene (i.e. Plastic) Sheeting shall not be allowed except to cover the waterproof paper in case of inclement weather.

E. Curing Compound:

Liquid membrane-forming compound shall be white pigmented and conform to Form 816, Section M.03.01-10(c).

F. Suitable Subbase Material:

Suitable subbase material shall be medium gradation processed aggregate base as specified in Technical Specification 210 – "Processed Aggregate Base", or bank run gravel meeting the applicable provisions of Form 816, Section M.02.02 and approved by the Engineer.

G. Dowels:

Dowels shall be 5/8-inch diameter x 24-inch long intermediate grade steel conforming to AASHTO M-38 and shall be smooth. Speed Dowel plastic sleeve or approved equal to cover one end of the dowel shall be 12-inches long by 5/8-inch diameter.

H. Wire Mesh Reinforcing:

Wire mesh reinforcing shall be cold-drawn steel wire conforming to the requirements of AASHTO M-32 and M-35, and shall be welded steel, no. 8 wire, spaced 6 inches by 6 inches, both ways. All 8 inch concrete walks, drives, and ramps shall be reinforced.

I. Detectable Warning Strips

Detectable warning strips shall be prefabricated cast-in-place truncated dome detectable warning surface tile as manufactured by ADA Fabricators, Inc. P.O. Box 179, North Billerica, MA 01862. The color shall be brick red and approved by the Engineer.

265.3 SUBMITTALS

The following submittals shall be submitted to the Engineer for review and approval prior to installation:

- Gradation test results for processed aggregate

- Concrete specifications from supplier
- Manufacturer's cut sheet for premolded joint material
- Manufacturer's cut sheet for waterproof paper
- Label or manufacturer's cut sheet for curing compound
- Gradation test results for processed aggregate
- Gradation test results for bank run gravel
- Manufacturer's cut sheet for dowels
- Manufacturer's cut sheet for wire mesh reinforcing
- Material certification for detectable warning strips

265.4 CONSTRUCTION METHODS

A. Excavation:

All proposed 5 inch thick walks shall be excavated 13 inches below and parallel to the finished grade of the walk. All proposed 8 inch walks and ramps shall be excavated 16 inches. Excavation shall extend 3 inches minimum and 6 inches maximum outside the edges of the proposed walk. Ledge rock encountered within 13 inches of the finished walk grade shall be removed. After completion of excavation, and prior to placing of base material, the subbase shall be compacted by at least 2 passes of a motor driven vibratory compactor; should the subbase appear soft and yielding, this material shall be removed to firm ground with a maximum depth of 25 inches below finished grade as ordered by the Engineer, for 5 inch thick walks, and 28 inches below finished grade for 8 inch walks and ramps. The sub-grade shall then be recompacted as herein before specified.

B. Subbase:

Subbase, if required, shall be placed in maximum 12 inch lifts and compacted with a minimum of 2 passes with a motor drive vibratory compactor.

C. Base:

The processed aggregate base material shall be placed in two 4 inch lifts, the full width of the excavation, and shall be compacted to the satisfaction of the Inspector with at least 2 passes of a motor driven vibratory compactor. Base should extend 3 to 6 inches beyond the outside edges of the walk. Additional fine material shall be added to fill any voids that may have developed during compaction and to bring the completed foundation to true line and cross section 5 inches (or 8 inches) below and parallel to the finished grade of the walk.

D. Forms:

Forms shall be of metal or wood, straight, free from warp and of sufficient strength to resist springing from the pressure of the concrete. Wood, forms for 5 inch thick walks shall be 2 inch by

6 inch smooth surfaced plank, except that at sharp curves, thinner material may be used. Forms for 8 inch thick walks and ramps shall be 8 inches deep. Metal forms shall be of section approved by the Inspector, and shall have a flat surface on the top. Forms shall be of a depth equal to the depth of the walk. Forms shall be securely staked, braced and held firmly to the required line and grade; special care shall be taken to maintain the proper shape of all curves. Forms shall remain in place for at least 24 hours after finishing of concrete. No stakes or bracing shall project above the top of the form. Forms shall be sufficiently tight to prevent leakage of concrete. All forms shall be cleaned and oiled before concrete is placed against them. Sheet metal templates, 1/4 inch thick of the full depth and width of the walk, shall be placed at every expansion joint or as ordered by the Inspector. If concrete is placed in alternate sections, these templates shall remain in place until concrete has been placed on both sides of the templates. As soon as the concrete has obtained its initial set, the template shall be removed.

E. Placing of Concrete:

The Contractor shall give the Inspector assigned to the work a 24 hour notice before placing concrete. All expansion joints and other embedded material items shall be in place, and all necessary placing and finishing tools, and all curing and protection materials shall be on the job prior to commencement of placing concrete. Before the concrete is placed, the sub-grade shall be thoroughly dampened so that it is moist throughout, but without puddles of water. Concrete shall be placed as near to its final position as practicable, and precautions shall be taken not to overwork the concrete while it is still plastic. The concrete shall be uniformly placed along the forms or screens. The concrete shall be placed in one course and struck off as hereinafter specified to the required graded cross section. The top shall be struck off by use of a suitable screed resting on the forms or screed support to the required grade and cross section.

F. Finishing of Concrete:

No finishing operation shall be performed while free water is present; finishing operations shall be delayed until all bled water and water sheen have left the surface and the concrete has started to set. Dusting the surface with cement to promote drying will not be permitted. After water sheen has disappeared, all exposed walk edges, and edges on each side of expansion joints shall be finished with a ¼ inch radius edging tool. Transverse dummy joints shall be formed by cutting a slot in the concrete, 1 inch deep. The slot may be cut by a 1 inch deep T-bar forced into the fresh concrete or by a 1 inch bit jointer held against a straight edge. After the concrete has partially hardened, the joint shall be edged with a jointer having a 1 inch bit and ¼ inch fillets held against a straight edge to make a clean straight joint. All other dummy joints in the walk shall be treated as above specified for transverse dummy joints. All completed dummy joints shall be 1 inch deep. After edging and jointing operations, the surface shall be floated with a wood float. In very warm weather, care shall be taken to prevent final set by shading until all finishing operations have been performed. If necessary, all tooled joints and edges shall be rerun after floating to maintain uniformity. After floating, the surface shall be brushed by drawing a soft bristled push broom, with a long handle over the surface of the concrete, to produce a non-slip surface. A rain spattered

finish will not be acceptable. Forms shall not be stripped for at least 24 hours after completion of finishing; care shall be taken to not damage the green concrete during stripping of forms.

G. Joints:

Transverse dummy joints shall be constructed at a longitudinal spacing equal to the width of the walk but not over 5 feet apart; or to match adjoining walk. Doweled transverse expansion joints shall be constructed to replace every third dummy joint and at change of walk thickness. Dowels are also to be installed between new and existing concrete slabs. Where new or repaired walks abut existing concrete sidewalks the Contractor shall drill holes measuring ¾ inch in diameter and 12 inches deep into the existing concrete slab. Transverse expansion joints shall be ½ inch thick by the depth of concrete (5 inches or 8 inches), premolded joint material and shall have 5/8 inch diameter by 24 inches long dowels spaced as shown in the details or as ordered by the Inspector. One end of each dowel shall be set in a 12 inch long 5/8 inch ID Speed Dowel plastic sleeve. The Contractor is to ensure that the expansion joint is kept straight and perpendicular to the forms by use of a steel or wood spacer drilled to accommodate the dowels. Dowels are to be centered vertically in the slab. In areas where dowels are not specified, premolded joint material shall be 1/4 inch thick.

Isolation joints, 1/4 inch by the depth of the concrete (5 or 8) inches, premolded joint material shall be used between the walk being constructed and existing concrete walks, entrance walks, building foundations, retaining walls, light pole bases, vaults, manholes and all similar structures. Where dowels are specified, the premolded joint material shall be 1/2 inch thick. Utility poles, hydrants, fire alarm boxes, gate boxes and similar installations located in the walk area shall be separated from the main walk by isolation joints of suitable pattern as ordered by the Inspector. No transverse dummy joint, or expansion joint, shall be located within 12 inches of any structure in the walk.

For repair work, all joints shall be similar in pattern to the joints in the adjacent existing walk.

All concrete areas, wider than the normal sidewalk width, will have isolation joints limiting the size of the continuous slab to a maximum of one 144 square feet.

H. Detectable Warning Strips:

The detectable warning strips for new construction shall be set directly in poured concrete according to the plans and the manufacturer's specifications, or as directed by the Engineer. The Contractor shall place 2-25 pound concrete blocks or sandbags on each tile to prevent the tiles from floating after installation in wet concrete.

The Contractor is responsible for removing any material splatters or debris and repairing any damage to the existing sidewalks arising from the installation of the tile.

I. Curing

In case of inclement weather, a forecast of inclement weather, or when ordered by the Engineer, immediately following the final finishing and as soon as possible without marring the surface, the concrete shall be covered with waterproof paper conforming to Section 265.2 (d) of these specifications. The waterproof paper shall extend at least 12 inches beyond the edge of the walk and, if required, shall be lapped a minimum of 6 inches. It shall be held down on all edges and laps by continuous wood planks or piles of sand. Use of rocks or broken concrete will not be permitted. Paper shall not be removed for at least 72 hours.

Curing methods shall conform to Form 816, Section 4.01.03 (F –7).

J. Wire Mesh Reinforcing:

The mesh shall be placed 4 inches below the required finished grade and all adjacent sections of the mesh shall be lapped 8 inches and tied together with wire, spaced not over 24 inches on centers, to prevent displacement. Wire mesh shall be continuous transversely between sides of the sidewalk. No more than two pieces of wire mesh may be used per 10 longitudinal feet of sidewalk. Scrap pieces of wire mesh shall not be placed in the sidewalk but shall be disposed of by the Contractor. Wire mesh shall not be placed within 2 inches of sidewalk edges or isolation joints. The concrete shall be placed 4 inches deep and struck off to a reasonably true grade prior to placing the wire mesh and the final 4 inches of concrete. Wire mesh, if supplied in rolls, shall be cut to the proper size and flattened out prior to placement in the concrete.

K. Cold Weather Concrete:

No Portland Cement Concrete shall be placed when the air temperature is 40° F or below. When, in the opinion of the Engineer, the condition of the weather is such that any concrete which has not been completely cured is liable to become frozen, such concrete shall be protected using suitable blanketing materials approved by the Engineer to prevent freezing of the concrete. During the period of time of such protection, the Contractor shall be responsible for the quality and strength of the concrete placed during cold weather, and any concrete damaged by frost action shall be removed and replaced at the Contractor's expense.

L. Conditions for 8 inch Walks and Ramps

Construction of 8 inch concrete pedestrian ramps shall conform to all provisions of this specification, except as follows:

1. Regardless of the type of pavement of adjacent sidewalks, all pedestrian ramps shall be constructed of Portland Cement Concrete.

2. The final texture of the concrete surface shall be a coarse broom finish, transverse to the slope of the ramp.

3. Ramps shall conform to detail drawings as shown in the plans and shall comply with all applicable laws and regulations governing handicap access to public sidewalks.

4. Ramps shall be a minimum of 5 feet in length.

5. Expansion joint material and dowels shall be placed between 8 inch walks and 5 inch walks.

265.5 MEASUREMENT

Measurement for this item will be based on the number of square feet of concrete sidewalks, ramps, and detectable warning strips completed and accepted in place.

265.6 PAYMENT

Payment for this item will be based on the contract unit price per Square Foot for 5 inch or 8 inch sidewalks, 8 inch ramps, and detectable warning strips including all labor, materials, testing, submittals, tools, and equipment necessary to complete the work as specified.

PAY ITEM	**PAY UNIT**
5″ Sidewalk	S.F.
8″ Sidewalk	S.F.
8″ Driveway Ramp	S.F.
8″ Pedestrian Ramp	S.F.
Detectable Warning Strips	S.F.

Rev. 5/10

TECHNICAL SPECIFICATION 266
CONCRETE DRESSING AND SEALER

266.1 SCOPE OF WORK

The purpose of this technical specification is for the furnishing of all labor, materials, testing, submittals, tools, and equipment necessary to install concrete dressing and sealer on existing concrete surfaces, in accordance with the details shown on the plans, or as directed by the Engineer.

266.2 MATERIALS

Materials for this work shall be ARDEX CD Concrete Dressing and ARDEX Concrete Guard, or equal as approved by the Engineer.

266.3 SUBMITTALS

The following submittals shall be submitted to the Engineer for review and approval prior to installation:

- Manufacturer's cut sheet for concrete dressing material

266.4 CONSTRUCTION METHODS

The construction methods including equipment, application procedures, performance, and warranty shall conform to the manufacturer's recommendations.

266.5 MEASUREMENT

Measurement for the application of concrete dressing and concrete sealer will be based on the actual number of square feet completed and accepted in place.

266.6 PAYMENT

Payment will be based on the contract unit price per Square Foot for concrete dressing and sealer. Payment for these items includes all labor, materials, testing, submittals, tools, and equipment necessary to complete the work as specified.

PAY ITEM	PAY UNIT
Concrete Dressing and Sealer	S.F.

Rev. 5/10

TECHNICAL SPECIFICATION 270
BRICK PAVERS, RESET BRICK AND VARIOUS PAVERS

270.1 SCOPE OF WORK

This technical specification covers the furnishing of all labor, materials, testing, submittals, tools, and equipment necessary to construct brick paving, or reset brick and other paving materials such as stone, slate, etc., as shown on the plans or as directed by the Engineer. Prior to installation of the bricks, all work within the brick paver limits shall be complete and shall include, but not be limited to, the adjustments of all public and private frames, grates, covers and utility boxes.

270.2 MATERIALS

A. Bricks:

Paving bricks shall conform to ANSI/ASTM C 902-79a Standard Specification for Pedestrian and Light Traffic Paving Brick, Class SX, Type II (Referred to as Glen-Gary Paver) or equivalent as approved by the Engineer.

B. Filter Fabric:

Filter fabric conforming to Form 816, Section M.08.01.26 shall be used when dry setting brick.

C. Base Material:

The processed aggregate base under the concrete shall be medium gradation conforming to Technical Specification 210 – "Processed Aggregate Base".

D. Leveling Course:

The leveling course for dry set bricks shall be commercial grade crushed stone dust.

E. Joints:

The paver joints shall be filled with either commercial grade crushed stone dust, masonry sand, or commercial grade polymeric stabilizing sand, as shown on the plans or as directed by the Engineer.

F. Mortar:

The base material leveling course for mortar set brick shall be Portland Cement Concrete which shall conform to all provisions of Technical Specification 265 – "Portland Cement Concrete Sidewalks and Ramps".

G. Joint Material:

Transverse expansion joint material shall be asphalt impregnated fiber material, Kork Pak, Proflex Reflex, or approved equivalent.

The expansion joint between the curb and concrete/brick shall be Harris Strip-Off closed cell foam with peel-off top or approved equivalent. The joint using closed cell foam material shall be sealed with Sikaflex polyurethane joint sealant, or approved equivalent.

H. Dowels:

Dowels shall be 5/8 inch diameter x 24 inch long intermediate grade steel conforming to AASHTO M-38 and shall be smooth. Plastic sleeves covering one end of the dowel shall be 5/8 inch diameter x 12 inches long, Speed Dowel, or approved equivalent.

I. Edge Restraints:

Edge restraints shall be snap-edge Pave Tech – Pave Edge, or approved equivalent.

270.3 SUBMITTALS

The following submittals shall be submitted to the Engineer for review and approval prior to installation:

- Two bricks shall be submitted; replacement brick shall match the existing brick as closely as possible
- Manufacturer's cut sheet for filter fabric
- Gradation test results for processed aggregate
- Material certification for commercial grade stone dust
- Material certification for polymeric stabilizing sand
- Material certification for masonry sand
- Concrete specifications from supplier
- Manufacturer's cut sheet for joint materials
- Manufacturer's cut sheet for dowels
- Manufacturer's cut sheet for edge restraints

270.4 CONSTRUCTION METHODS

The construction of the processed aggregate and concrete base material supporting the brick pavers shall be in accordance with Technical Specifications 265.2 and 265.4 for 5 inch concrete sidewalks.

The area of the mortar set brick pavers shall be excavated to a depth of approximately 16 inches.

Where the plans specify mortar set brick, the bricks shall be installed on 8 inches of compacted processed aggregate base and 5 inches of Portland Cement Concrete installed monolithically with the adjacent sidewalk as shown in the plans and details. All mortar set bricks shall be set on a bed of mortar. All joints shall be mortared, being careful not to get mortar on exposed faces of brick.

There shall be no expansion joint between the concrete sidewalks and the brick pavers. Transverse expansion joints in the concrete sidewalks shall be carried through the concrete base and the brick pavers. The transverse expansion joints shall also be carried through the brick pavers. Transverse dummy joints in the concrete sidewalk shall not be carried through the concrete base under the brick pavers. An expansion joint shall be made between the granite curb and concrete/brick face.

Where the plans specify dry set brick, they shall be installed on 8 inches of compacted processed aggregate with filter fabric placed on top of the aggregate. The leveling course on top of the filter fabric shall consist of a minimum ¾ inches (maximum 1 inch) of compacted crushed stone dust. When placed, the bricks shall tightly abut each other. Exposed edges of bricks shall be set on a plastic angle edge restraint. Final setting of brick shall be with a plate compactor taking care to have sufficient material so as to not damage the brick. After compacting with masonry sand, the area shall be flushed with water to ensure that joints have been filled. Any area that shows gaps in the joints shall be recompacted and appropriately swept, misted, or flushed.. All joints shall be filled with commercial grade crushed stone dust, masonry sand, or commercial grade polymeric stabilizing sand as shown on the plans or as directed by the Engineer.

If the polymeric sand manufacturer specifies a water mist for setting the joints, all the brick and adjacent areas shall be swept clear of all polymeric sand residue.

270.5 MEASUREMENT

Measurement for this item will be based on the number of square feet of bricks or pavers, completed and accepted in place including excavation and materials.

270.6 PAYMENT

Payment for this item will be based on the unit price per Square Foot of brick paving constructed and accepted, including all labor, materials, testing, submittals, tools, and equipment necessary to complete the work as specified.

PAY ITEM	**PAY UNIT**
Mortar Set Brick	S.F.
Dry Set Brick	S.F.
Reset Brick/Stone/Slate	S.F.

Rev. 5/10

TECHNICAL SPECIFICATION 271
GRANITE BELGIUM BLOCK

271.1 SCOPE OF WORK

This technical specification covers the furnishing of all labor, materials, testing, submittals, tools, and equipment necessary to construct granite Belgium block paving as shown on the plans or as directed by the Engineer.

271.2 MATERIALS

Granite block shall be rectangular in shape to the size shown on the plans and details and shall conform to Form 816, Section M12.06.1.

The processed aggregate base shall be medium gradation in accordance with Technical Specification 210 – "Processed Aggregate Base".

Mortar shall conform to Form 816, Section M.11.04.

Filter fabric conforming to Form 816, Section M.08.01.26 shall be used.

271.3 SUBMITTALS

The following submittals shall be submitted to the Engineer for review and approval prior to installation:

- Gradation test results for processed aggregate
- Manufacturer's cut sheet for mortar indicating material is AASHTO M-85 compliant
- Manufacturer's cut sheet for filter fabric

271.4 CONSTRUCTION METHODS

Excavation shall be made of sufficient depth and width to accommodate the processed aggregate base as shown on the project plans and details. The base shall be compacted to a firm, even surface and shall be approved by the Engineer.

Granite blocks shall be on a mortar bed on 8 inches of compacted processed aggregate base. Granite blocks shall be set in edge and settled into place with a heavy wooden hand rammer, to the line and grade required, straight and true for full depth on a mortar bed on compacted processed aggregate base at the depths shown on the project plans and details.

All suitable processed aggregate base or bank run gravel excavated for the block paving is the property of the Town of Windsor and after approval of the Engineer may be reused as base material for the block paving.

271.5 MEASUREMENT

Measurement for this item will be based on the number of square yards of granite block paving completed and accepted.

271.6 PAYMENT

Payment for this item will be based on the unit price per Square Yard of granite block paving installed and accepted, including all labor, materials, testing, submittals, tools, and equipment necessary to complete the work as specified.

PAY ITEM	**PAY UNIT**
Granite Belgium Block	S.Y.

Rev. 5/10

TECHNICAL SPECIFICATION 275
STAMPED CONCRETE SURFACES

275.1 SCOPE OF WORK

This item shall consist of all work associated with furnishing and installing concrete stamped surfaces in accordance with these specifications, as detailed on the plans or as directed by the Engineer. This shall include all labor, materials, testing, submittals, tools, and equipment necessary to saw cut, excavate, prepare the base and install the stamped concrete surface to the lines and grades shown on the plans including any incidentals thereto.

275.2 MATERIALS

Base material shall be medium gradation processed aggregate base conforming to Technical Specification 210 – "Processed Aggregate Base".

Concrete shall be Portland Cement Concrete conforming to Technical Specification 265 – "Portland Cement Concrete Sidewalks and Ramps".

Concrete finish to be an Increte Systems stamped concrete decorative finish or an approved equal. The pattern, colors, and dimensions shall be as follows for the following surfaces:

A. Crosswalks:
   - Pattern - Herringbone
   - Color - Brick Red
   - Dimensions - Brick Size 8"x4", Grout Line 3/4"-7/8"x3/8"
B. Snowshelfs:
   - Pattern - Running Bond Used Brick
   - Color - Brick Red
   - Dimensions - Brick Size 8"x4", Grout Line 3/4"-7/8"x3/8"
C. Cul-de-sacs/Roundabouts:
   - Pattern - Running Cobblestone Granite (radial to the circle)
   - Color - Pewter
   - Dimensions - Brick Size 6"-8" x 4-1/2", Grout Line 1/2"-5/8"

The colors used shall be blended throughout the entire concrete mixture. The color shall not be applied to the surface only. Color hardeners on the stamped concrete surfaces shall be used as part of the installation. All materials used shall meet the applicable manufacturer's specifications and recommendations for an installation of this type.

Dowels and welded steel fabric shall conform to the requirements of Article M.06.01 of Form 816.

Joint sealer shall meet the requirements of Article M.03.01 (8)(a.) of Form 816.

Expansion joint material shall be Korkpak, or approved equivalent.

275.3 SUBMITTALS

The following submittals shall be submitted to the Engineer for review and approval prior to installation:

- All pertinent manufacturers' information for stamped concrete systems shall be submitted to the Town for approval. This includes: engineering calculations, colors, patterns and locations of similar installations with names and phone numbers.

  For Increte Systems product information, call:
  INCRETE SYSTEMS
  8509 Sunstate Street
  P.O. Box 151103
  Tampa, Florida 33634
  (800) 752-4626

- Gradation test results for processed aggregate base
- Manufacturer's cut sheet for dowels and welded steel fabric
- Concrete specifications from supplier
- Manufacturer's cut sheet for joint sealer
- Manufacturer's cut sheet for expansion joint material

275.4 CONSTRUCTION METHODS

Construction methods for the installation shall conform to the following requirements:

1. Excavation, forms, concrete finishing, backfilling and removal of surplus materials shall meet the requirements of Technical Specification 105 – "Excavation, Placement, and Disposal of Surplus Material" and Technical Specification 265 – "Portland Cement Concrete Sidewalks and Ramps".

2. Work associated with the installation of the stamped concrete surfaces shall be performed by a trained and certified contractor for the product used. All work shall meet the manufacturer's specifications and recommendations for an installation of this type.

3. Reinforcing shall be installed free from dirt, oil, paint, grease, mill scale and loose or thick rust which could impair the bond of steel with the concrete.

4. Unless otherwise approved by the Engineer, crosswalks shall be constructed after completing paving of adjacent roadway bituminous concrete finish course. Only half of the length of the crosswalk may be constructed at one time to allow vehicular access for the roadway. Steel plates with bituminous concrete shims may be used to allow vehicular access.

275.5 MEASUREMENT

Measurement for this item will be based on the number of square feet of stamped concrete surface, completed and accepted.

275.6 PAYMENT

Payment for this item will be based on the unit price per Square Foot of Stamped Concrete surfaces constructed and accepted, including all labor, materials, testing, submittals, tools, and equipment necessary to complete the work as specified.

PAY UNIT	**PAY ITEM**
Stamped Concrete (Surface)	S.F.

Rev. 5/10

TECHNICAL SPECIFICATION 300
DRAINAGE, CULVERTS, UNDERDRAINS, AND COLLECTOR PIPING

300.1 SCOPE OF WORK

This technical specification covers the furnishing of all labor, materials, testing, submittals, tools, and equipment, necessary to excavate, lay and join drainage, culverts, underdrain, and collector piping systems and fittings, place warning tape and tracing wire, backfill and compact trenches, as shown on the plans or as directed by the Engineer. Work under this item also includes all handling of water, trench wall support, and breaking into and connecting proposed drainage systems to new or existing drainage systems or structures.

300.2 MATERIALS

Materials used for the construction of the drainage, culvert, underdrain, or collector piping systems shall conform to Form 816, Section M.08.01. Joints in concrete pipe shall be preformed plastic gaskets or flexible watertight, rubber-type gaskets conforming to the requirements of Form 816, Section M.08.01.

Sand used for bedding shall meet the requirements of Form 816, Section M.08.01.21.

Gravel, when specified, shall meet the requirements of Technical Specification 205 – "Bank Run Gravel".

Crushed stone shall meet the requirements of Form 816, Section M.01.01, No. 6.

Backfill, when specified, shall meet the requirements of Form 816, Section 2.05.03.

Geotextiles, when specified shall meet the requirements of Form 816, Section M.08.01.26.

Drainage locator tape and #10 solid tracing wire, XLPUSE, for underdrain and collector systems shall comply with details as shown on the drawings.

300.3 SUBMITTALS

The following submittals shall be submitted to the Engineer for review and approval prior to installation:

- Material certifications for total length of pipe to be used
- Gradation test results for sand
- Gradation test results for gravel

- Gradation test results for crushed stone
- Gradation test results for backfill
- Manufacturer(s) cut sheet(s) for geotextile(s)
- Manufacturer(s) cut sheet(s) for locator tape and #10 solid tracing wire

300.4 CONSTRUCTION METHODS

All pipe shall be properly stored and protected to prevent damage. Any material deemed unsuitable by the Engineer shall be immediately removed from the project site. When pipe is being installed, all trenches shall be kept dry. Pipes and fittings shall be laid accurately to the required line and grade using laser beam techniques unless otherwise approved by the Engineer. Pipe shall be uniformly supported along its entire length on bedding material as described and shown on the details. Pipe shall be properly haunched and tamped against its sides to firmly hold it in place. All other backfill shall be suitable material as approved by the Engineer. If the excavated materials are not approved for backfill by the Engineer, or if unsuitable materials need to be excavated and removed, the Contractor shall provide suitable backfill materials from outside sources, if no other suitable materials are available from the project. Warning tape shall be installed 12 to 18 inches above the pipe and #10 tracing wire shall be installed on all underdrain and collector piping. Further detailed construction methods shall be in accordance with Form 816, Section 6.51.03.

All trenches shall be thoroughly compacted utilizing a method approved by the Engineer. In all trench areas, compaction density shall not be less than 95% of the dry density achieved by AASHTO T180, Method D. If any of the compaction tests fail, the Contractor shall, at no cost to the Town, recompact and retest the area until uniform test results are acceptable.

If the plans indicate, or the Engineer approves a combined underdrain and collector piping system, the installation and materials shall conform to the requirements of the underdrain installation.

300.5 MEASUREMENT

Measurement for this item will be based on the actual number of linear feet of the various sizes and types of pipes, completed and accepted in place, measured from the interior face of a structure to the interior face of a structure or to the exterior face of a terminating pipe length. Measurement for backfill provided from sources outside the project limits only, shall be by the cubic yard measured in place.

300.6 PAYMENT

Payment for pipe will be based on the contract unit price per Linear Foot of pipe. Payment for backfill and ¾" crushed stone, if required, will be based on the contract unit price per Cubic

Yard. All items to be completed and accepted in place including all labor, materials, testing, submittals, tools, and equipment necessary to complete the work as specified.

Removal and disposal of any unsuitable materials shall be paid under Technical Specification 105 – "Excavation, Placement and Disposal of Surplus Material". Backfilling with suitable materials shall be paid under Technical Specification 205 – "Bank Run Gravel". Payment for excavation is only applicable for removal of unsuitable materials below the specified trench depth. Payment for backfill is for replacement of all unsuitable materials, but only if suitable materials are not available on the project site.

PAY ITEM	**PAY UNIT**
(Size-type) Pipe	L.F.
Backfill (type)	C.Y.
¾" Crushed Stone	C.Y.

Rev. 5/10

TECHNICAL SPECIFICATION 301
CLEAN EXISTING DRAINAGE SYSTEM

301.1 SCOPE OF WORK

The work included in this item shall consist of furnishing all labor, materials, testing, submittals, tool and equipment to perform all work necessary for cleaning, removing and disposing of all sludge, dirt, sand, gravel, roots, grease, and other debris from the existing drainage system which includes: pipes, 12 inches to 42 inches diameter; culverts, greater than 42 inches diameter; manholes; catch basins; and drop inlets, throughout the project limits, as directed by the Engineer.

301.2 MATERIALS

Not applicable.

301.3 SUBMITTALS

Not applicable.

301.4 CONSTRUCTION METHODS

Selection of the equipment used shall be based on the condition of structures and the lines at the time the cleaning operations commence and shall be approved by the Engineer.

The sequence of the Contractor's work shall allow for the proper and adequate maintenance of all functional drainage systems.

Precautions shall be taken to protect the drainage systems at all times. All workmen shall be experienced and skilled in the use of the equipment used. The Engineer reserves the right to prohibit use of any equipment or method deemed inappropriate for the intended work.

Any and all debris resulting from the cleaning operations shall be removed from the job site and disposed of by the Contractor. The Contractor shall make every effort to remove all sludge, dirt, sand, gravel, roots, grease, and other debris from the existing drainage systems including discharge points. Washing sludge, dirt, sand, gravel, roots, grease, and other debris downstream shall not be permitted.

301.5 MEASUREMENT

Catch basins, manholes and drop inlets will be measured for payment by the actual number of units cleaned. Pipes and culverts cleaned under this item will be measured for payment by the actual number of linear feet of pipe/culvert cleaned for those 12 inches to 42 inches in diameter, and those greater than 42 inches in diameter.

301.6 PAYMENT

This work will be paid for at the contract unit price each for "Clean Existing Catch Basin," "Clean Existing Manhole," "Clean Existing Drop Inlet." Cleaning of pipes and culverts will be paid for at the contract unit price per linear foot for, "Clean Existing Pipe/Culvert—12 inches to 42 inches in Diameter," "Clean Existing Culvert—Greater than 42 inches in Diameter," which price shall include all labor, materials, testing, submittals, tool and equipment incidental to the completion of these items. All costs incidental to the disposal of sludge, dirt, sand, gravel, roots, grease, and other debris will be included in the price above.

PAY ITEM	**PAY UNIT**
Clean Existing Catch Basin	EA.
Clean Existing Manhole	EA.
Clean Existing Drop Inlet	EA.
Clean Existing Pipe/Culvert – 12″ to 42″	L.F.
Clean Existing Culvert – Greater than 42″	L.F.

Rev. 5/10

TECHNICAL SPECIFICATION 305
CATCH BASINS, DRAINAGE MANHOLES, AND YARD DRAINS

305.1 SCOPE OF WORK

This technical specification covers the furnishing of all labor, materials, testing, submittals, tools, and equipment necessary to construct, alter, reconstruct, reset, convert and/or replace catch basins, drainage manholes, yard drains, inlets or such existing structures, in accordance with the plans, detail drawings, specifications or as directed by the Engineer. This work shall include excavation, sawcutting, removal and disposal of unsuitable material (which shall include existing manhole or catch basin structures), any necessary base material, suitable backfill material, dewatering, frames, grates, tops and covers, cleaning and incidentals necessary to complete the work as specified or as directed.

305.2 MATERIALS

Materials for this work shall conform to the applicable provisions of Form 816, Section 5.07.02. Red brick is not to be used. Ladder rungs shall conform to Form 816 Section M08.02.5

Processed aggregate shall be medium gradation conforming to Technical Specification 210 – "Processed Aggregate Base".

Yard drain grates shall be Campbell Foundry R-918 or equivalent, as approved by the Engineer.

305.3 SUBMITTALS

The following submittals shall be submitted to the Engineer for review and approval prior to installation:

- Material certifications for all pre-cast concrete
- Material certifications for all metal components
- Gradation test results for processed aggregate base

305.4 CONSTRUCTION METHODS

Drainage structures shall be built in accordance with Form 816, Section 5.07.03 and as specified herein or as shown on the plans.

A. Catch basins, Manholes, and Yard Drains - General

Ends of all pipes shall extend to and be cut flush with inside face of structures. The edges of pipes shall be mortared to cover the reinforcing.

Ladder rungs shall be installed in all catch basins and manholes when the depth of the structure from the top of the frame to the lowest flow line exceeds 4 feet. Ladder rungs shall be spaced a maximum of eighteen (18) inches apart, in straight alignment and firmly cemented into the structure walls.

Where precast sump units or slabs are used, the Contractor shall prepare and level the base with a minimum depth of 8 inches of processed aggregate per Technical Specification 210-Processed Aggregate Base.

Sump depths for catch basins are normally 2 feet but shall be increased to 4 feet when catch basins outlet to a drywell, and infiltrator system, or when directed by the Engineer.

Poured in-place concrete floor slabs shall be a minimum of 6 inches thick and shall be installed on leveled, compacted undisturbed soil. In case of overexcavation, compacted processed aggregate shall be used to bring the elevation to the bottom of the slab.

Backfill with suitable material approved by the Engineer.

The Contractor shall achieve a minimum compaction density of 95% of the dry density achieved by ASHTO T180, Method D. Water may be used in combination with mechanical methods on lifts which shall not exceed 12 inches. During compaction, care should be taken to avoid damaging the structure.

Frames shall be set to finished grade when constructed. If adjacent paving is not completed prior to winter, asphalt shims shall be installed as directed by the Engineer.

The interior floors and sumps shall be cleaned prior to acceptance.

B. Precast Units

All precast concrete products must have the casting date clearly labeled on each product. No precast concrete product shall be delivered to the site within the 7 day period following the casting date.

All weakened areas or knockouts that are not used shall be bricked and mortared to maintain design wall thickness.

Riser sections shall have sealed connections as recommended by the manufacturer and approved by the Engineer. Precast sections shall contain knockouts or weakened wall sections only at the required locations for pipes.

The exterior joints of precast catch basins shall be wrapped with geotextile covering at least 12 inches on both sides of the joint.

C. Concrete Masonry Units

Where concrete masonry units are used, corbelling will be allowed at a maximum of one inch per course on the last 3 courses. On Type C basins, only the front and side walls shall be corbelled. The top course of masonry block shall be turned 90 degrees on the front and side walls only. (On Type CL basins, all 4 sides shall be corbelled and the top course shall be turned 90 degrees).

When the total exterior depth of the catch basin exceeds 10 feet, the wall thickness shall be increased to 12 inches.

The exterior of all concrete masonry catch basins and manholes shall be wrapped with geotextile. All fabric joints shall be overlapped 6" minimum. Backfill shall only be accomplished after inspection and approval of the structure and connectors by the Engineer.

All masonry units and metal fittings for catch basins, manholes and inlets shall be set in a full ½ inch minimum bed of mortar.

In sandy soils, and prior to geotextile application, the portion of the walls between the floor and the elevation of the invert of the outlet pipe shall be coated with damp-proofing material in accordance with the requirements of Form 816, Section 7.08.

D. Sanitary Manholes

All work performed on sanitary manholes will be in conformance with the technical specifications of the Metropolitan District Commission (MDC). Any materials furnished by MDC shall be picked up by the Contractor at 125 Maxim Road, Hartford, CT or at other locations designated by MDC.

305.5 MEASUREMENT

Measurement for this item will be based on the actual number of catch basins, manholes or inlets, constructed or reconstructed, altered or converted as shown on the plans, or as ordered by the Engineer.

305.6 PAYMENT

Payment for these items will be based on the unit price for Each structure completed and accepted in place, including all labor, materials, testing, submittals, tools, and equipment necessary to complete the work as specified.

PAY ITEM	**PAY UNIT**
(Type) Catch Basin	EA.
(Type) Catch Basin Over 10′ Deep	EA.
(Type) Manhole	EA.
(Type) Manhole Over 10′ Deep	EA.
Reset Catch Basin Top	EA.
Reset Manhole Top	EA.
Convert Catch Basin to (Type) Catch Basin	EA.
Convert Catch Basin to Manhole	EA.
Convert Manhole to (Type) Catch Basin	EA.
Replace (Type) Catch Basin Grate & Top	EA.
Replace Manhole Frame & Cover	EA.
Install Catch Basin or Manhole Riser	EA.
Yard Drain	EA.

Rev. 5/10

TECHNICAL SPECIFICATION 310
PIPE BULKHEADS

310.1 SCOPE OF WORK

This technical specification covers the furnishing of all labor, materials, testing, submittals, tools, and equipment necessary to construct bulkheads in pipes or existing drainage structures, in accordance with the plans or as directed by the Engineer.

310.2 MATERIALS

Materials for this work shall conform to the applicable provisions and the requirements of Form 816, Sections M.08.02 and M.11.04.

310.3 SUBMITTALS

The following submittals shall be submitted to the Engineer for review and approval prior to installation:

- Material certification indicating all brick, concrete building brick, and masonry concrete units conform to the requirements of Form 816, Section M.08.02.
- Material certifications for all pre-cast concrete
- Material certifications for all metal structures
- Label or manufacturer's cut sheet for mortar

310.4 CONSTRUCTION METHODS

All masonry units shall be laid in full mortar beds.

All bulkheads shall be constructed using as a minimum, 2 layers of brick within pipes or shall be a full wall thickness of the structures being repaired.

The entire outside surface area of the bulkhead shall be parged with a minimum of 1/2 inch thickness of mortar. Backfill shall only be accomplished after inspection and approval of the bulkhead by the Engineer.

310.5 MEASUREMENT

Measurement of this item will be based on the actual number of bulkheads completed and accepted as shown on the plans, or as ordered by the Engineer.

310.6 PAYMENT

Payment for this item will be based on the contract unit price for Each bulkhead, completed and accepted in place including all labor, materials, testing, submittals, tools, and equipment necessary to complete the work as specified.

PAY ITEM	**PAY UNIT**
Pipe Bulkhead	EA.

Rev. 5/10

TECHNICAL SPECIFICATION 320
GRADE ADJUSTMENTS TO UTILITY BOXES AND GATE VALVES

320.1 SCOPE OF WORK

This technical specification includes furnishing all labor, materials, testing, submittals, tools, and equipment necessary to adjust valve frames, covers, or utility boxes contained within the limits of work, to the final elevation of the pavement, overlay, or grades shown on the plans. The installation of bituminous concrete shims as shown on the plans, or if required by the Engineer, are included in this item.

320.2 MATERIALS

The Contractor shall provide all adjustment rings or telescopes in accordance with the Town of Windsor, Metropolitan District Commission or other utility standards.

Bituminous concrete for shims shall be Class 2 conforming to Form 816, Section M.04.

Emulsion shall conform to Form 816, Section M.04.01.4.c.

320.3 SUBMITTALS

The following submittals shall be submitted to the Engineer for review and approval prior to installation:

- Material certifications for all adjustment rings or telescopes
- Material certification or manufacture(s) cut sheet for emulsion

320.4 CONSTRUCTION METHODS

Prior to the installation of the final pavement surface, all adjustments to the utility frames and covers will be made. Where the elevation of the adjustment interferes with safe traffic travel conditions, or if directed by the Engineer, the protrusion will be marked by cones, barricades, or other safety marking to distinguish the hazard. All warning devices used shall conform to the Manual on Uniform Traffic Control Devices.

Winter shims, if shown on the plans or if ordered by the Engineer, will normally be installed only if there is a significant delay, such as a winter shut-down, before placing the finish course of bituminous concrete. The areas to be shimmed shall be swept clean of all debris and be free of standing water. The emulsion shall be applied to the existing pavement at the match mark using a brush to create a band at least 4 inches wide. The width of the shim shall be 2 feet for every one

inch of height of the exposed structure. Compaction shall be by plate compactor, roller or other method approved by the Engineer. Diesel fuel shall not be used to keep materials from sticking to compaction equipment. If deemed necessary by the Engineer, winter shims shall be reinstalled by the Contractor.

320.5 MEASUREMENT

Measurement for this item will be based on the number of gate valves or utility boxes adjusted and/or the number of shims installed, including the reinstallation of any winter shims.

320.6 PAYMENT

Payment for this item will be based on the contract unit price for Each adjustment to utility boxes and gate valves, or installation of shims, including all labor, materials, testing, submittals, tools, and equipment necessary to complete the work as specified.

PAY ITEM	**PAY UNIT**
Gate Valve Adjustment	EA.
Utility Box Adjustment	EA.
Shims	EA.

Rev. 5/10

TECHNICAL SPECIFICATION 330
INFILTRATION SYSTEMS

330.1 SCOPE OF WORK

This technical specification covers the furnishing of all labor, materials, testing, submittals, tools, and equipment necessary to install infiltration systems of the type, size and length as shown on the plans, at the locations and to the lines and grades designated on the plans, or as directed by the Engineer, and in conformity with these specifications and manufacturer's requirements.

330.2 MATERIALS

The materials for this work shall conform to the following:

The chambers, bridges and endplates shall conform to the High Capacity Chamber System as manufactured by Infiltrator Systems Incorporated of Old Saybrook, CT or approved equal. The components of the system shall conform to the dimensions as shown on the details and shall be manufactured with high density polyethylene. The top of each chamber unit shall be arch-shaped and the bottom completely open. The sidewalls of the chamber shall be louvered to a height of approximately 1 inch allowing for free flow within the chamber bed. The top of the sidewall shall be located at the bottom of the arch which spans the top of the chamber. The nominal dimensions of each chamber shall be 16 inches in height, 34 inches wide at the base, and 75 inches long.

Chambers shall conform to H-20 load rating standards of the American Association of State Highway and Transportation Officials (AASHTO), and shall be capable of supporting 32,000 pounds/axle with 18 inches of properly compacted cover (excluding asphalt pavement).

Each unit shall have interlocking latches to allow for indefinite extension of units into rows. A 1.25 inches overlap shall be provided at joints between units.

Each chamber shall be provided with a knockout port capable of receiving 4 inch diameter pipe. The knockout port shall be located on the center of the chamber.

Crushed stone shall meet the requirements of Form 816, M.01.01, No. 3.

Gravel, when required, shall meet the requirements of Technical Specification 205 – “Bank Run Gravel”.

Borrow, when required, shall meet the requirements of Technical Specification 110 – “Borrow”.

The geotextile shall be a non-woven, 3.3± lb/ft² geotextile such as Amoco 45/53, Mirafi 140-N or equivalent and shall meet the requirements of Form 816 Section M. 08.01.26.

330.3 SUBMITTALS

The following submittals shall be submitted to the Engineer for review and approval prior to installation:

- Material certifications /manufacturer(s) cut sheets for all infiltration system components
- Gradation test results for crushed stone
- Gradation test results for gravel
- Gradation test results for borrow
- Manufacturer(s) cut sheet(s) for geotextile(s)

330.4 CONSTRUCTION METHODS

Excavate the chamber bed to the required chamber dimensions plus a minimum of 12 inches more on each side. Compact the bed using a vibratory roller to a minimum of 95% of the dry density achieved by AASHTO T180, Method D. If in loose sandy soils, flood the excavated area to achieve required compaction.

Place a minimum depth of 24 inches of 1.5 to 2 inch crushed stone in 6 inch lifts and compact the stone using at least two passes per lift with a vibratory roller with full dynamic force applied to a uniformly level surface.

The infiltration systems shall be installed and assembled in accordance with the manufacturer's recommendations and requirements.

Holes are to be cut in the bridge end plates that will receive pipes. The pipes shall be cut so that they extend approximately 2 inches beyond the plate into the system.

After installation of the system, place the crushed stone (1.5 to 2 inches) around the perimeter of the bed to the top of the chamber in 6 inch layers and compact each layer with two passes of a vibratory plate compactor. Place the geotextile over the stone across the entire area of the chamber bed.

Carefully place suitable backfill material along the outside perimeter of the chamber bed. The backfill material shall be well graded with no organic material or shrink-swell clays and no stones over 3 inch in diameter. Do not drop the backfill material directly onto chambers and do not use wheeled vehicles on the chamber bed. Push the backfill material onto the chambers with a small bulldozer. The first lift above the chambers should be approximately 6 inches in depth to allow sufficient cover for the backfill machinery. The backfill must be spread lengthwise and not across their width. Compact backfilling to subgrade, with lifts not exceeding 6 inches, to a

minimum depth cover of 18 inches over the tops of the chambers. The backfill must be placed on the bed's shoulder and spread out and pushed as the first layer. Each lift must be compacted with a vibratory roller to 95% the dry density achieved by AASHTO T180, Method D.

Locator tape is to be placed 12 inches to 18 inches above the infiltrator.

330.5 MEASUREMENT

Measurement for the Infiltration System will be based on the actual number of linear feet of infiltration chambers completed and accepted and measured in place from end plate to end plate. The excavation necessary for the work, the crushed stone, geotextile and the backfill is considered part of the linear footage of the chambers and will not be measured for payment.

Measurement for backfill provided from sources outside the projects limits as well as excavation of unsuitable material outside of chamber bed limits shall be by the cubic yard measured in place.

330.6 PAYMENT

Payment for this item will be based on the contract unit price per Linear Foot of Infiltration System completed and accepted in place, including all labor, materials, testing, submittals, tools, and equipment necessary to complete the work as specified.

Removal and disposal of any unsuitable materials shall be paid under Technical Specification 105 – "Excavation, Placement and Disposal of Surplus Material". Backfilling with suitable materials shall be paid under Technical Specification 205 – "Bank Run Gravel" and/or Technical Specification 110 – "Borrow". Payment for excavation is only applicable for removal of unsuitable materials below the specified trench depth. Payment for backfill is for replacement of all unsuitable materials, but only if suitable materials are not available on the project site.

PAY ITEM	**PAY UNIT**
Infiltration System	L.F.

Rev. 5/10

TECHNICAL SPECIFICATION 400
CONCRETE ABUTMENTS, ENDWALLS, AND RETAINING WALLS

400.1 SCOPE OF WORK

This technical specification covers the furnishing of all labor, materials, testing, submittals, tools, and equipment necessary to construct concrete abutments, endwalls, and retaining walls at locations indicated on the plans, in accordance with dimensions and details shown, or as directed by the Engineer.

400.2 MATERIALS

Unless otherwise noted, concrete shall be Class C conforming to Form 816, Section, M.03. Reinforcing steel shall conform to Form 816, Section M.06.01. Processed aggregate base shall conform to Technical Specification 210 – "Processed Aggregate Base", medium gradation.

400.3 SUBMITTALS

The following submittals shall be submitted to the Engineer for review and approval prior to installation:

- Concrete specifications from supplier
- Material certification for all pre-cast concrete
- Gradation test results for processed aggregate

400.4 CONSTRUCTION METHODS

Work under this item shall include excavation, dewatering, placement of base material, installation of form work, reinforcing steel and concrete, placement of compacted backfill and any other incidentals necessary for construction of concrete abutments, endwalls, and retaining walls. Forms shall be smooth and free of dirt, old concrete, holes, splinters or other defects which, in the opinion of the Engineer, would produce an inadequate finish or prevent concrete from being uniformly distributed throughout the form work. All exposed corners shall be chamfered and the finished concrete shall be smoothed by accepted finishing methods. All other construction methods shall conform to Form 816, Section 5.06.03 as applicable.

400.5 MEASUREMENT

Measurement for this item will be based on the number of cubic yards of concrete in place.

400.6 PAYMENT

Payment for this item will be based on the unit price per Cubic Yard of concrete, placed and accepted, including all labor, materials, testing, submittals, tools, and equipment necessary to complete the work as specified.

PAY ITEM	**PAY UNIT**
Abutment	C.Y.
Endwall	C.Y.
Retaining Wall	C.Y.

Rev. 5/10

TECHNICAL SPECIFICATION 405
RIP RAP

405.1 SCOPE OF WORK

This technical specification covers the furnishing of all labor, materials, testing, submittals, tools, and equipment necessary to excavate for and install rip rap including stone, concrete, bedding and geotextile, to protect slopes and waterways from water damage, as shown on the plans or as specified herein.

405.2 MATERIALS

The stone for this work shall be the type called for on the plans and shall conform to the requirements of Form 816, Section M.12.02.

The concrete for this work shall be Class "C" concrete and shall conform to the requirements of Form 816, Section M.03.01.

The bedding for this work shall be processed aggregate base medium gradation conforming to Technical Specification 210 – "Processed Aggregate Base".

The geotextile for this work shall conform to the requirements of Form 816, Section M.08.01.26.

405.3 SUBMITTALS

The following submittals shall be submitted to the Engineer for review and approval prior to installation:

- Gradation test results for stone
- Concrete specifications from suppliers
- Gradation test results for processed aggregate
- Manufacturer(s) cut sheet(s) for geotextile(s)

405.4 CONSTRUCTION METHODS

Construction methods shall conform to Form 816, Sections 7.03.03 and 7.55.03.

405.5 MEASUREMENT

Measurement for this item will be based on the actual number of cubic yards, in place and accepted. The length and width shall be measured in place while the depth shall be as shown on the plans.

405.6 BASIS OF PAYMENT

Payment for this item will be based on the contract unit price per Cubic Yard for the type of rip rap indicated, completed in place, including all labor, materials, testing, submittals, tools, and equipment necessary to complete the work as specified.

PAY ITEM	**PAY UNIT**
(Type) Rip Rap	C.Y.

Rev. 5/10

TECHNICAL SPECIFICATION 410
DUST CONTROL

410.1 SCOPE OF WORK

This technical specification covers the furnishing of all labor, materials, testing, submittals, tools, and equipment necessary for daily cleanup and control of dust throughout the project area.

410.2 MATERIALS

Calcium chloride shall conform to Form 816, Section 9.42.02.

The Contractor may substitute by furnishing water for calcium chloride.

410.3 SUBMITTALS

The following submittals shall be submitted to the Engineer for review and approval prior to installation:

- Manufacturer's cut sheet or label from bag for calcium chloride

410.4 CONSTRUCTION METHODS

All work under this technical specification will be ordered by the Inspector or Engineer.

Construction methods shall conform to Form 816, Sections 9.39.03, 9.42.03, and 9.43.03. A broadcast spreader must be used to spread calcium chloride for dust control. Hand spreading will not be permitted.

410.5 MEASUREMENT

Measurement for these items will be based on a unit price for dust control as directed, and conforming to Form 816, Sections 9.39.04, 9.42.04, and 9.43.04.

410.6 PAYMENT

Payment for these items will be based on the contract unit prices, as indicated, including all labor, materials, testing, submittals, tools, and equipment necessary to complete the work as specified.

PAY ITEM	**PAY UNIT**
Sweeping for dust control	Hour
Water for dust control	M. Gal.
Calcium Chloride	Tons

Rev. 5/10

TECHNICAL SPECIFICATION 415
LOAMING, SEEDING, HYDROSEEDING, SODDING, AND EROSION CONTROL MATTING

415.1 SCOPE OF WORK

This technical specification covers the furnishing of all labor, materials, testing, submittals, tools, and equipment necessary to loam, fertilize, seed, mulch, hydroseed, sod, or install erosion control matting on all areas shown on the drawings or as directed by the Engineer. The work shall consist of providing an accepted uniform stand of established perennial turf grasses, including watering, weed control and mowing. Where loaming, seeding, hydroseeding, sodding, and/or installing erosion control matting is included in other items, the technical portions of this technical specification shall apply.

415.2 MATERIALS

A. Loam

The loam shall comply with the requirements of Form 816, Section M.13.01, except that the loam shall be free from rocks and stones greater than 3/4 inch. Loam shall be delivered unfrozen to the job site. No existing loam taken from the site shall be reused without approval of the Engineer.

B. Fertilizer

Composite commercial fertilizer shall bear the manufacturer's guarantee statement of analysis and meet the minimum requirements of 10% nitrogen, 10% phosphoric acid, 10% potash, with at least 50% of the nitrogen being organically carried.

C. Mulch

Mulch shall comply with the requirements of Form 816, Section M.13.05.

D. Seed

Lawn seed shall be fresh, clean and new crop seed composed of the following varieties, mixed in proportion, and passing tests for the minimum percentages of purity and germination indicated:

	MIX		
	Proportion By Weight Percent	Minimum Purity Percent	Minimum Germination Percent
Perennial Rye Grass	50 parts	98	90
Kentucky Blue Grass	20 parts	85	75
Fine Fescue	30 parts	98	85

E. Sod

The sod shall have a seed mix as recommended by the grower and approved by the Engineer for the specific use of the sod. Sod shall be living sod obtained from a commercial sod farm, and shall be free from noxious weeds, insect infestations, and fungeous and bacterial diseases. The sod shall be cut to a minimum depth of one to one and one-half inches. Agricultural Ground Dolomitic Limestone shall conform to Form 816, Section M.13.02. A commercial grade granular fertilizer shall contain 15% nitrogen, 15% phosphoric acid, and 15% potash, with at least 50% of the nitrogen being organically carried. Stakes for pegging, when shown on the plans, shall be wood, approximately 1 inch x 2 inch and of sufficient length to penetrate the sod and the topsoil to a minimum depth of two inches of subsoil.

F. Erosion Control Matting

Erosion control matting shall comply with the requirements of Form 816, Section M.13.09.

415.3 SUBMITTALS

The following submittals shall be submitted to the Engineer for review and approval prior to installation:

- Gradation test results for loam
- Material certification/test results confirming percentage of organic matter in loam
- Manufacturer's guarantee statement of analysis for fertilizer
- Label from bag and/or manufacturer(s) cut sheet for mulch
- Affidavit and test report for seed mixture
- Manufacturer's guarantee statement for sod
- Manufacturer(s) cut sheet for erosion control matting

415.4 CONSTRUCTION METHODS

Prior to spreading loam, the area shall be brought to a uniform grade 4 inches minimum below the finished surface or as indicated on the plans. The subgrade shall be thoroughly pulverized to a depth of at least 3 inches by rototilling, harrowing or by other approved methods. Loam shall be applied in a 4" layer, unless otherwise directed. The Contractor is responsible for a satisfactory catch of grass as herein specified. If required, or as directed by the Engineer, the newly seeded, hydroseeded or areas with erosion control matting shall be watered by the Contractor, as required, until a uniform stand of grass has been established.

Any sparse areas will be reseeded as required.

The fertilizer shall be applied at the rate of 20 pounds per 1000 square feet. Seeding and hydroseeding shall only be done from March 15th to June 15th or from August 15th to October 15th. Seeding at other times shall be done only when ordered or approved by the Engineer. Pulverized, dolomitic, agricultural limestone shall be spread at a rate of 46 pounds per 1000 square feet.

A. Seeding

The grass seed shall be applied at the rate of 6 pounds per 1000 square feet. The seeded area shall be mulched with a layer of grass hay or straw at the rate of 10 pounds per 100 square feet, and in lieu of an approved mulch, shall be thoroughly watered each day until satisfactory growth has been established. After establishment of the turf in the Spring, weed control shall be applied per the manufacturer's recommendation. The Contractor is responsible for one mowing at the direction of the Engineer.

B. Hydroseeding

Mulch shall be applied at a rate of 25-40 pounds per 1000 square feet. (40 lbs. per 1000 square feet for slopes greater than 2 to 1). After establishment of the turf in the Spring, weed control shall be applied per the manufacturer's recommendation. The Contractor is responsible for one mowing at the direction of the Engineer.

Fertilizer, seed, and mulch shall be applied using an acceptable hydroseeding distribution method approved by the Engineer.

C. Sodding

The fertilizer and or lime shall be applied at a rate as per the sod suppliers recommendation. Live sod shall be installed in conformance with Form 816, Section 9.53.03.

D. Erosion Control Matting

Erosion control matting shall be installed in accordance with Form 816, Section 9.50.03.7.

E. Warrantee

The Contractor shall warrantee the work for the one year period following the planting. Any bare areas shall be reestablished by the Contractor at the Contractor's expense.

415.5 MEASUREMENT

Measurement for this item will be based on the number of square yards of surface area acceptably loamed, seeded, hydroseeded, sodded, or where erosion control matting has been installed and accepted.

415.6 PAYMENT

Payment for this item will be based on the contract unit price per Square Yard for Loaming, Loaming & Seeding, Loaming & Hydroseeding, Loaming & Sodding, and Erosion Control Matting, including all labor, materials, testing, submittals, tools, and equipment necessary to complete the work as specified.

PAY ITEM	**PAY UNIT**
Loaming	S.Y.
Loaming & Seeding	S.Y.
Loaming & Hydroseeding	S.Y.
Loaming & Sodding	S.Y.
Erosion Control Matting	S.Y.

Rev. 5/10

TECHNICAL SPECIFICATION 420
PLANTINGS

420.1 SCOPE OF WORK

This technical specification covers the furnishing of all labor, materials, testing, submittals, tools, and equipment necessary to furnish and install plantings in accordance with the plans and detail drawings. The work shall include excavation, furnishing and installing the planting, backfill, fertilizer, edging, mulch, watering, weed control mats, stakes and all miscellaneous items.

420.2 MATERIALS

Material for this work shall conform to the requirements of Form 816, Section M.13, as specified.

420.3 SUBMITTALS

The following submittals shall be submitted to the Engineer for review and approval prior to installation:

- Source of supply for plant material shall be provided at least one month prior to planting

420.4 CONSTRUCTION METHODS

Construction methods used for this section shall be in accordance with Form 816, Section 9.49, as may be amended on the plans and detail drawings. All plantings shall be thoroughly watered during backfilling and within 48 hours after planting, if conditions warrant. Subsequent waterings and care shall be peformed by the Contractor to comply with the provisions of Form 816, Section 9.49.03.17, Establishment Period.

420.5 MEASUREMENT

Measurement for this item will be based on the actual number of each type and size of planting counted in place, planted and accepted.

420.6 PAYMENT

Payment for this item will be based on the contract unit price Each for the type and size planting completed and accepted in place, including all labor, materials, testing, submittals, tools, and equipment necessary to complete the work as specified.

PAY ITEM	**PAY UNIT**
Plant (type/size)	EA.

Rev. 5/10

TECHNICAL SPECIFICATION 425
BOUNDARY MARKERS

425.1 SCOPE OF WORK

This technical specification covers the furnishing and installation of all concrete merestones or other specified boundary markers, labor, materials, testing, submittals, tools, and equipment necessary to accurately set, reset, or replace merestones or markers at the locations shown on the plans or as directed by the Engineer in accordance with these specifications.

425.2 MATERIALS

Merestones to be set or reset under this item shall be of reinforced concrete, a minimum of 42 inches in length, 6 inch x 6 inch base and a 5 inch x 5 inch top with a 2 inch minimum diameter brass disc. When they are to be set in wooded areas, the minimum length of the merestones shall be 48 inches, to allow a minimum of 6 inches to extend above the ground. Brass discs, where applicable, shall match State of Connecticut, Department of Transportation discs and markings and in all other cases shall be approved by the Engineer. Pins shall be ¾ inch diameter x 36 inches long solid steel rod, or No. 6 reinforcing bar. All other markers shall be identified and approved by the Engineer.

425.3 SUBMITTALS

Not applicable.

425.4 CONSTRUCTION METHODS

The Contractor, under the supervision of a Land Surveyor licensed by the State of Connecticut shall excavate and set each merestone plumb. The top of the merestones will be set flush with the ground, except in wooded areas, as noted above, or unless otherwise directed by the Engineer. Backfill will be thoroughly tamped so as to not allow any lateral movement of the merestones. Any excess materials shall be removed from the site and the discs shall be punched at the precise location of the point in question. In areas where the merestone location is obscured by a new concrete installation such as a sidewalk or other obstacles, a disc may be set in wet concrete and punched after the concrete is cured. In ledge, a disk shall be installed by embedding it to the ledge using adhesive approved by the Engineer. Alternatively, a 3/8 inch diameter and ½ inch deep drill hole may be substituted for a disc in concrete or ledge surfaces. In asphalt pavement, a railroad spike shall be utilized and punched in the same manner as a merestone. In other instances, a prescribed marker will be set in accordance with the Engineer's instructions.

425.5 MEASUREMENT

Measurement for this item will be based on the number of merestones, or other type markers set, reset, or replaced and accepted.

425.6 PAYMENT

Payment for this item will be at the contract unit price per Each boundary marker including all labor, materials, testing, submittals, tools, and equipment necessary to complete the work as specified.

PAY ITEM	**PAY UNIT**
Set Merestone	EA.
Reset Merestone	EA.
Replace Merestone	EA.
Set/Reset (Specified Marker)	EA.

Rev. 5/10

TECHNICAL SPECIFICATION 430
MAINTENANCE AND PROTECTION OF TRAFFIC

430.1 SCOPE OF WORK

This technical specification shall include identifying safety hazards and then furnishing all necessary labor, materials, testing, submittals, tools, and equipment including, but not limited, to signs, barricades, traffic drums, cones, flashers, construction fencing, flaggers, warning devices, temporary pavement markings, delineators, etc., to control vehicular and pedestrian traffic through and adjacent to the project area. These measures and actions shall safely maintain the accessibility of public and construction traffic by preventing potential construction hazards. This work shall also include all costs associated with the erecting, maintaining, moving, adjusting, cleaning, relocating, and storing the aforementioned materials as is necessary to ensure safe movement of vehicular and pedestrian traffic throughout the project area.

The Contractor may request that the Town approve the detouring of traffic around the construction area if it is in the best interest of public safety and the Town. Detouring shall be limited to normal construction hours and two way traffic patterns shall be re-establisheded at the end of each work day.

Working hours shall be between the hours of 8:30 A.M. to 3:30 P.M., Monday through Friday. Additional hours may be approved by the Engineer.

430.2 MATERIALS

All materials under this item including any warning devices, such as signs, barricades, flashers, cones, drums, vests, paddle signs, delineators, and other incidentals necessary to protect the work area and maintain vehicular and pedestrian traffic through and adjacent to the project area shall be in accordance with the Manual of Uniform Traffic Control Devices, as amended, or as approved by the Engineer.

430.3 SUBMITTALS

The following submittals shall be submitted to the Engineer for review and approval prior to installation:

- Material certifications for all cones, drums, and barracades

430.4 TRAFFIC CONTROL

The Contractor shall keep the roadway under construction open to vehicular and pedestrian traffic for the full length of the project. Traffic is to be maintained on one section of existing pavement, proposed pavement, or a combination thereof. Alternating one way traffic may be utilized and limited to a maximum length of 500 feet during construction hours. Lane width for alternating one-way traffic shall be kept to a minimum width of 10 feet, or as directed by the Engineer. A sufficient number of travel ways and pedestrian passways shall be provided to move that traffic ordinarily using the roadway. The travel lanes and pedestrian passways shall be drained and kept reasonably smooth, and in a suitable condition at all times in order to provide minimum interference to traffic consistent with the prosecution of the work. Suitable ingress and egress shall be provided at all times where required for all intersections, driveways, and for all abutting properties having legal access.

Traffic patterns shall conform to the Connecticut Department of Transportation Special Provision Item 0971001A - Traffic Control Plans & Typical Materials.

For such instances where detouring is unavoidable, the Contractor shall provide the Engineer a proposed detour route that will be subject to the Town's approval prior to the beginning of construction activities. For any instance when the Contractor proposes to detour traffic, the Engineer shall be provided a minimum of 72 hours notice. The right to detour traffic is not implied and the decision to do so will be the sole responsibility of the Town.

Where flashers or other warning devices are used, all signs shall be erected and placed in accordance with the Manual of Uniform Traffic Control Devices, as amended.

The Contractor shall furnish a sufficient number of traffic control devices such as signs, barricades, traffic drums, cones, flashers, construction fencing, flaggers, warning devices, temporary pavement markings, and delineators to forewarn traffic of the impending construction and to guide the traveling public through the construction safely.

All signs in any one signing pattern shall be mounted the same height above the roadway. The Contractor shall keep all signs in proper position, clean, and legible at all times. Care shall be taken so that weeds, shrubbery, construction materials, equipment, and soil are not allowed to obscure any sign, light, or barricade. Signs that do not apply to construction conditions should be removed or adjusted so that the legend is not visible to approaching traffic.

Snow removal and correction of icy conditions that prohibit or impede traffic within the roadway, other than those resulting from the Contractor's operations, will remain an obligation of the Town.

All proposed construction area traffic control is subject to the review and approval by the Engineer, or Windsor Police Department. If the traffic control is deemed unacceptable or

hazardous, construction operations may be suspended until the Contractor corrects the traffic control issue. The construction suspension shall be at the Contractor's expense.

Emergency Situations

The Contractor shall provide the Town of Windsor with the names, addresses, and telephone numbers of at least two employees residing in the Windsor area who will be responsible and in charge and may be contacted in case of necessary or emergency work.

430.5 MEASUREMENT

Measurement for this item will be based on a lump sum basis to perform all the work described above. Should the project be increased in scope due to construction changes beyond the above requirements, the Contractor can claim additional compensation as extra work at that time. Likewise, any reduction in the scope of work, the Town will request a suitable credit for work not performed.

430.6 PAYMENT

Payment for this item will be based on the contract Lump Sum price including all labor, materials, testing, submittals, tools, and equipment necessary to perform the work. Partial payments for this item will be made based on the percentage completion of the overall work. If called upon to do emergency work, or to repair damage caused by natural or manmade disasters, such emergency work shall be considered as extra work for which the Contractor can claim reimbursement for reasonable expenses. Should the Contractor fail to perform any of the work required under this technical specification, the Town of Windsor may perform or arrange for others to perform such work. In such cases, the Town will deduct from money due or to become due the Contractor, all expenses connected therewith.

PAY ITEM	**PAY UNIT**
Maintenance and Protection of Traffic	L.S.

Rev. 5/10

TECHNICAL SPECIFICATION 435
CHAIN LINK FENCING

435.1 SCOPE OF WORK

The purpose of this technical specification is to cover the furnishing of all labor, materials, testing, submittals, tools, and equipment necessary to furnish and install chain link fencing, including gates, as shown on the plans, or as directed by the Engineer.

435.2 MATERIALS

All chain link fencing materials shall conform to the requirements of Form 816, Section M.10.05. Fence fabric, metal posts, rails, and fittings shall be factory coated with polyvinyl chloride (PVC). All cut ends shall be coated with PVC at the factory. Unless otherwise specified, the fabric, posts, rails, and fittings shall be black in color, and all chain link fences shall have both a top rail and bottom rail. Gates shall be of the same type materials as the chain link fence. Size of all chain link fencing materials shall be shown on the plans or details.

Concrete for setting of posts shall be Class C, conforming to the requirements of Form 816, Section M.03.01.

435.3 SUBMITTALS

The following submittals shall be submitted to the Engineer for review and approval prior to installation:

- Manufacturer(s) cut sheet(s) for fencing materials

435.4 CONSTRUCTION METHODS

The installation of chain link fencing shall conform to the requirements of Form 816, Section 9.13.03.

435.5 MEASUREMENT

Measurement for chain link fence will be based on the actual number of linear feet of chain link fence completed and accepted. Measurement for gates will be based on the actual number of gates completed and accepted.

435.6 PAYMENT

Payment for these items will be based on the contract unit price per Linear Foot for chain link fence, and based on the contract unit price for Each, for gates, including all labor, materials, testing, submittals, tools, and equipment necessary to complete the work as specified.

PAY ITEM	**PAY UNIT**
Chain Link Fence (Height)	L.F.
Chain Link Gate	EA.

Rev. 5/10

TECHNICAL SPECIFICATION 436
CONSTRUCTION FENCING

436.1 SCOPE OF WORK

The purpose of this technical specification is to cover the furnishing of all labor, materials, testing, submittals, tools, and equipment necessary to furnish and install construction fencing, as shown on the plans, or as directed by the Engineer.

436.2 MATERIALS

Construction fencing shall be 4 foot high, green plastic, similar to Visi-Barrier, or equal.

436.3 SUBMITTALS

The following submittals shall be submitted to the Engineer for review and approval prior to installation:

- Manufacturer(s) cut sheet(s) for fencing materials

436.4 CONSTRUCTION METHODS

Construction fencing for shall be installed in accordance with the plans and as directed by the Engineer.

436.5 MEASUREMENT

Measurement for construction fencing will be based on the actual number of linear feet of chain link fence completed and accepted. Minor relocations of the construction fencing to accommodate construction, or at the Town's request, shall be performed by the Contractor at no additional cost. Any relocation of fencing over 100 feet per occurrence shall be reimbursed by the Town at the unit price bid.

436.6 PAYMENT

Payment for these items will be based on the contract unit price per Linear Foot for construction fencing, including all labor, materials, testing, submittals, tools, and equipment necessary to complete the work as specified.

PAY ITEM	**PAY UNIT**
Construction Fencing	L.F.

Rev. 5/10

TECHNICAL SPECIFICATION 440
CONSTRUCTION STAKING

440.1 SCOPE OF WORK

This technical specification covers the furnishing of all labor, materials, testing, submittals, tools and equipment necessary to perform all construction layout, control, and reference staking for satisfactory completion of the project.

440.2 MATERIALS

Hubs shall be 1½ inch x 1½ inch x 16 inch oak and witness stakes shall be 1 inch x1 inch x 36 inch oak or other hardwood.

440.3 SUBMITTALS

Not applicable.

440.4 CONSTRUCTION METHODS

Hubs with tacks shall be used for all control points, centerline or baseline offsets and structure stakeout and shall be accompanied by witness stakes marked with the pertinent information. For supplemental stakeout only, witness stakes alone may be used. For laser grade control and the verification of the laser elevation a hub with witness shall be provided.

All staking shall be performed under the direct supervision of a Land Surveyor licensed by the State of Connecticut and shall conform to "MINIMUM STANDARDS FOR SURVEYS AND MAPS IN THE STATE OF CONNECTICUT" adopted by the Connecticut Association of Land Surveyors on September 26, 1996, Connecticut General State Statutes 20-300b, and the applicable provisions of Form 816, Section 9.80.03.

In addition, reference stakeout (line and grade) for areas involving horizontal or vertical curves shall be placed at intervals no greater than 25 foot, or in sufficient intervals to provide the Contractor with necessary information to meet the designed lines and grades.

Work in this section also requires that, where the drawings indicate a graphical boundary and/or street line intersection, all efforts will be made prior to construction activities, to locate any and all existing merestones, iron pins and any other boundary marker, as well as those identified on the plans (except for those indicated to be set or reset) using prescribed methods for Class A-2 accuracy, or using 3 ties for each marker.

If impacted during construction activities, each removed marker shall be re-established by the Contractor's surveyor.

440.5 MEASUREMENT

Measurement for this item shall be based on a lump sum for construction staking completed in accordance with these specifications. Partial payments will be made for this item based on the percentage completed of the overall work, as determined by the Engineer.

440.6 PAYMENT

Payment for this item will be at the contract Lump Sum for construction staking completed and shall include all labor, materials, testing, submittals, tools and equipment necessary to complete the work as specified.

PAY ITEM	**PAY UNIT**
Construction Staking	L.S.

Rev. 5/10

TECHNICAL SPECIFICATION 445
PAVEMENT MARKINGS

445.1 SCOPE OF WORK

The purpose of this technical specification is for the furnishing of all labor, materials, testing, submittals, tools, and equipment necessary to install epoxy resin pavement markings, including centerlines, lane lines, shoulder lines, stop bars, crosswalks, parking stalls, lane arrows, symbols, and legends in accordance with the details shown on the plans, or as directed by the Engineer.

445.2 MATERIALS

Materials for this work shall conform to the requirements of Form 816, Section M.07.22.

445.3 SUBMITTALS

The following submittals shall be submitted to the Engineer for review and approval prior to installation:

- Material certifications for all epoxy resin pavement markings

445.4 CONSTRUCTION METHODS

The construction methods including equipment, application procedures, performance, and warranty shall conform to the requirements of Form 816, Section 12.10.03.

Crosswalks and Raised Crosswalks: Only glass beads conforming to the requirements of Grading "A" (smaller beads) shall be applied at a rate of 25 pounds per gallon of epoxy pavement making material.

Line striping shall not be applied to structures within the roadway. This includes catch basin tops, manholes covers, and all other movable/repositionable objects.

445.5 MEASUREMENT

Measurement for the centerlines, lane lines, shoulder lines, and parking stalls will be based on the actual number of linear feet for each color and width completed and accepted in place. Stop bars, crosswalks, lane arrows, symbols, and legends will be based on the actual number of square feet completed and accepted in place.

445.6 PAYMENT

Payment will be based on the contract unit price per Linear Foot for centerlines, lane lines, shoulder lines, and parking stalls. Payment will be based on the contract unit price per Square Foot for stop bars, crosswalks, lane arrows, symbols, and legends. Payment for these items includes all labor, materials, testing, submittals, tools, and equipment necessary to complete the work as specified.

PAY ITEM	**PAY UNIT**
Epoxy Resin Pavement Marking (Width) (Color)	L.F.
Epoxy Resin Symbols and Legends	S.F.

Rev. 5/10

TECHNICAL SPECIFICATION 450
SIGNAGE

450.1 SCOPE OF WORK

The purpose of this technical specification is to cover the furnishing of all labor, materials, testing, submittals, tools, and equipment necessary to furnish and install street name, regulatory, warning, and informational signage, including sign posts and associated hardware, as shown on the plans, or as directed by the Engineer.

450.2 MATERIALS

Reflective sheeting shall conform to the requirements of Form 816, Section M.18.10.2.

Regulatory, warning, and informational signage properties, including, but not limited to, size, font style, font size, colors, symbols, and layout shall conform to the Manual of Uniform Control Devices, 2003 Edition, or as amended.

Sheet aluminum sign blanks shall conform to the requirements of Form 816, Section M.18.13. For street name signage, the sign material shall be a flat .080 gauge aluminum blade with legend on both sides and rounded corners.

Street name sign font shall be Univers 65. Street name sign background shall be 3M white diamond grade VIP with 3M ElectroCut 1177 Green Film, or approved equal. Street name sign coloring shall be white lettering, a ½ inch white border, and a green background.

A 12 inch street name sign blade holder shall be provided as shown in the plan.

All steel sign posts shall be a galvanized breakaway design at 3 pounds per foot conforming to the mechanical requirements of ASTM A 499-81, Grade 420 and to the chemical requirements of ASTM A1-76 carbon steel tee rail. All sign posts shall meet the AASHTO requirements for breakaway design contained in the "Standard Specifications for Structural Supports for Highway Signs, Luminares and Traffic Signals".

450.3 SUBMITTALS

The following submittals shall be submitted to the Engineer for review and approval prior to installation:

- Manufacturer's cut sheets for all signs
- Manufacturer's cut sheet for steel sign posts

450.4 CONSTRUCTION METHODS

The installation of all signage shall conform to the requirements of Form 816, Section 12.08.03.

All signage shall be installed at locations approved by the Legal Traffic Authority.

450.5 MEASUREMENT

Measurement for signage will be based on the actual number of square feet of sign completed and accepted.

450.6 PAYMENT

Payment for this item will be based on the contract unit price per Square Foot for signage (Type), including all labor, materials, testing, submittals, tools, and equipment necessary to complete the work as specified.

PAY ITEM	**PAY UNIT**
Signage (Type)	S.F.

Rev. 5/10

TECHNICAL SPECIFICATION 455
STREET LIGHTING SYSTEMS

455.1 SCOPE OF WORK

This technical specification covers the furnishing of all labor, materials, testing, submittals, tools, and equipment necessary to install light distribution fixtures, poles, metered controller, concrete bases, wiring, and conduit of the type herein identified, complete and in place at the locations and to the dimensions and details shown on the plans or as directed by the Engineer. This work includes miscellaneous items necessary for a complete installation including excavation, backfilling, warning tapes, site restoration, etc. It also includes the coordination and costs associated with public utility work. This technical specification covers both decorative and commercial lighting systems. It is the intention of the Town to have consistency among the types of fixtures maintained by the community.

455.2 MATERIALS

A. Decorative Street Light Systems

1. Fixtures

The mainframe assembly shall consist of cast aluminum upper and lower cage frames welded securely to 4 slotted extruded aluminum cage legs to form a one piece assembly and secured internally to a ballast housing with four (4) ¼”-20 screws. (Product equivalent Hanover Lantern, Inc. Drawing No. L49561).

2. Lenses

The lenses shall be of a 0.125-inch thick clear polycarbonate.

3. Ballasts

The ballast housing shall be made of cast aluminum with a minimum wall thickness of 3/16 inches. The access door must have double concealed hinges and be secured by a tamperproof stainless steel screw. The ballast shall be 150-watt high pressure sodium. It shall be mounted on a slide tray which is equipped with a quick disconnect device and can be removed without the use of tools. Ballast shall be wired for 120 volts.

4. Light Distribution and Electrical Requirements

The fixture shall be wired for a maximum wattage of 150 high pressure sodium lamp type S-55 mogul base with a top mounted Type III distribution reflector (high pressure sodium lamp shall be provided). A #74 3/4 frosted glass chimney shall be placed in the fixtures base for decorative purposes.

5. Poles

The poles provided shall consist of one piece extruded aluminum castings constructed with a minimum wall thickness of 0.125 inches. Pole shall be 12'-0 ¼". The aluminum post shall be welded to an anchor base with four bolt openings. A large conduit opening shall be provided as well as a wiring access door. The access door shall be secured with four stainless steel screws. The poles shall be provided with four (4) 5/8 inch diameter by 18 inch long anchor bolts to be embedded a minimum of 16 inches into the concrete base. All bolts and screws to have anti-seize applied to threads. (Product equivalent Hanover Lantern, Inc. Drawing No. 316 - 7 Thru 18).

6. Exterior Finish

All fixtures and poles shall be cleaned and rinsed in a hot dip cleaning solvent or equivalent to remove all grease, dirt and blemishes before painting. The poles and fixtures shall be factory painted satin black.

7. Light Pole Bases

The light pole base(s) shall be a minimum of 4,000 PSI precast concrete as shown on the Town of Windsor Standard Details and shall include PVC conduit, pole fasteners and ground conduit. The top of the base shall be 15 inches square and taper to a minimum of 20 inches square at the bottom. The depth shall be 48 inches.

8. Metered Streetlight Controller

The electric service shall be 100 amp., I phase, 3 wire, 120V/240V. The controller assembly shall include the following:

1 EA	Meter Socket
1 EA	Main Circuit Breaker, 100 amp, 2 pole, General Electric Molded Case Model No. THQL 21100, or approved equal
1 EA	Circuit Breaker, 60 amp., 2 pole, General Electric Molded Case Model No. THQL 2160 or approved equal
1 EA	Contactor, electrically held, 60 amp 120v coil, 2 pole, Cutler-Hammer Model #C30 DN2-AB or approved equal

1 EA	Photocell, cabinet mounted 1800 watt, 120v
1 EA	GFCI Receptacle, 20 amp., 125 volt, in control panel
1 EA	Incandescent lamp holder with pull chain
1 EA	100 amp. main lug only, single phase, 12 circuit surface load center, General Electric Type TLM 1612C, or approved equal
1 EA	Timer, 60 minutes with hold feature, Intermatic Model No. FF60MH (serves as "on and off" test override switch), or approved equal

The controller shall have appropriate contactors, circuit breakers, grounding bars, wiring, and appurtenances for proper operation. An "on and off" override timer shall be provided for testing purposes. If the lights are off and the timer is placed in the "on" mode then the lights shall come on and override the photocell. The controller circuit panel shall contain a 20 amp., 125 volt GFCI receptacle and an incandescent lamp holder with a 60 watt lamp and a pull chain located in an upper quadrant of the panel. The controller is to be furnished with one lighting contactor controlled by the photocell.

9. Cabinet

The cabinet shall be a NEMA standard size M cabinet made of ¼ inch thick aluminum and shall have overall dimensions of 50 inches high by 30 inches wide by 18 inches deep unless otherwise approved by the Engineer. The cabinet finish shall be natural aluminum (unpainted). No auxiliary switch panel door shall be provided. The main door shall be equipped with a Corbin No. 1548-1 tumbler type lock (industry #2 lock) and two (2) keys shall be furnished to the Town.

10. Controller Base

The base shall conform to the drawings as shown on the Town of Windsor Standard Details. The base shall be made of Class "C" concrete and may be precast. It shall include one (1) dedicated 2 inch PVC electrical grade conduit sweep for the utility company power feed, one 5/8 inch by 8 foot copper ground rod, a minimum of 4-2 inch polyvinyl chloride sweeps for wiring to the light poles, and 2-3/4 by 18 inch galvanized anchor bolts.

11. Conduit and Wiring

Conduit shall be 2 inch, schedule 40 PVC electrical grade conduit. Wiring shall consist of 3-1/0 THW aluminum wire, and a #6 copper ground unless otherwise approved by the Engineer.

B. Commercial Street Light Systems

The commercial light standards and luminaire shall conform to Form 816, Sections M15.01 through M15.05, with the following exceptions:

1. The Commercial Luminaire shall be of a GE type M-250A2 POWR/DOOR® Luminaire With Cutoff Optics or approved equal.

2. Mounting height of light fixtures shall be 32'-6" feet above grade.

3. On commercial lighting systems, contactor number one is to control even numbered light poles and contactor number two is to control odd numbered light poles. A separate 2 pole, 60 amp circuit breaker, shall power each contactor. The normal operation of all lights is to be controlled by the photocell.

4. Cabinet and Controller Base shall meet the above requirements of Section 455.2.A.9 and 455.2.A.10 unless otherwise approved by the Engineer.

455.3 SUBMITTALS

The following submittals shall be submitted to the Engineer for review and approval prior to installation:

- Manufacturer(s) cut sheet(s) on fixtures
- Manufacturer(s) cut sheet(s) on light poles
- Manufacturer(s) cut sheet(s) on light pole bases
- Manufacturer(s) cut sheet(s) on controller cabinet
- Manufacturer(s) cut sheet(s) on controller base

455.4 CONSTRUCTION METHODS

A. Decorative Street Light Systems

1. Cabinet

A ¾-inch black plywood backboard shall be mounted on the inside back wall of the cabinet and shall serve as the main panel for the mounting of controller components. The photocell shall be installed on the upper portion of the cabinet. The photocell shall be mounted so that the cabinet retains its weatherproof characteristics around the mounting area. A utility company approved meter socket shall be mounted on the right side of the cabinet when viewed from the front. A dedicated 2 inch PVC pipe shall run from the concrete cabinet base outside the cabinet to the meter socket for the utility company service wires.

2. Light Pole and Controller Bases

The Contractor shall install and level the bases as shown on the plans. The bases shall be set on 8 inches of compacted processed aggregate on a stable prepared subgrade.

3. Conduit and Wiring

Conduit shall be installed a minimum of 24 inches below grade. Conduit shall be connected with approved couplings to the base sleeves incorporated within the light pole bases. Electrical wiring will extend through the bases for connection to each pole. The work shall include all excavation, backfill, materials, labor and surface restoration, including loaming and seeding, and temporary and permanent pavement replacement. Where such surface restoration is required, all work shall be performed in accordance with the Town Standards. Warning tape shall be installed a minimum of 1 foot above all electrical conduit. Standoffs shall be used in accordance with the serving public utility company or as directed. The Contractor shall also supply and install all items necessary to insure proper functioning of the lighting system, including photocell(s), ground wire to be made to the ground lug in the pole base as shown on the electrical diagram, inline fuses and holders, non-delay 5 amp 300 volt capacity for each pole, and appropriate connectors, miscellaneous wiring and appurtenant items.

4. Metered Streetlight Controller

All construction methods for this item shall be in accordance with the manufacturer's construction methods and the National Electrical Code (NEC). Each street light controller installation shall be located and mounted as directed by the Engineer or as shown on the plans.

B. Commercial Street Light Systems

The installation of commercial street light systems shall conform to Form 816, Sections 10.03, 10.04, and 10.08. The installation of the cabinet shall conform to the above 455.4.A.1. All other installation shall conform to applicable AASHTO, CT DOT, and NEC standards.

C. Public Utility Work

Where public utility work is required, the Contractor shall make arrangements to ensure proper coordination of work. If required, the Contractor shall provide all excavation, backfilling of service conduit, labor, surface restoration and any appurtenant work, from the power source to the service meter necessary for receiving electrical service as described. Cost of this work shall be included in the lump sum price for the controller.

455.5 MEASUREMENT

Measurement for light poles, fixtures, controllers and bases, will be based on the number of poles, fixtures, controllers, and bases of the type specified, completed and in place.

Measurement for conduit and wiring will be based on the number of linear feet of conduit and wiring installed and completed.

455.6 PAYMENT

Payment for this item will be at the contract unit prices per Each for decorative and commercial light poles, fixtures, controllers and bases and per Linear Foot for conduit and wiring, completed and accepted in place including all labor, materials, testing, submittals, tools, and equipment necessary to complete the work as specified.

PAY ITEM	PAY UNIT
Decorative Light Pole and Base	EA
Commercial Light Pole and Base	EA
Conduit	L.F.
Wiring	L.F.
Controller and Base	EA

SECTION VI. STANDARD DETAILS

These Standard Details are provided to supplement the Technical Specifications and provide information necessary for construction.

SECTION D-100 – SITE PREPARATION

D-100 Construction Site Entrance Pad
D-101 Baled Hay/Straw for Erosion Control
D-102 Filter Fabric Fence for Erosion Control
D-103 Silt Sacks at Catch Basins

SECTION D-200 – ROADWAY CONSTRUCTION

D-200 Roadway Cross Section
D-201 Cul-de-sac Construction
D-202 Bituminous Concrete Residential Driveway
D-203 Bituminous Concrete Pavement Repairs
D-204 Curb Types
D-205 Concrete Sidewalks
D-206 Concrete Sidewalk Ramps
D-207 Brick Pavers
D-208 Median Detail
D-209 Speed Humps
D-210 Bituminous Concrete Commercial Parking Areas and Drives

SECTION D-300 – DRAINAGE & UTILITIES

D-300 Drainage Trench
D-301 Underdrain / Collector Drain
D-302 Catch Basin Type "C" Precast Concrete
D-303 Catch Basin Type "C" Concrete Masonry Units
D-304 Catch Basin Top Type "C" Precast Concrete
D-305 Catch Basin Type "CL" Precast Concrete
D-306 Catch Basin Type "CL" Concrete Masonry Units
D-307 Catch Basin Top Type "CL" Precast Concrete
D-308 Drainage Manhole Precast Concrete
D-309 Drainage Manhole Concrete Masonry Units
D-310 Yard Drain
D-311 Plunge Pool
D-312 Wing Type Endwall
D-313 Endwall
D-314 Support Wall for Flared End Pipe

SECTION 400 – INCIDENTAL CONSTRUCTION

D-400 Tree and Shrub Planting
D-401 Chain Link Fencing
D-402 Decorative Light Pole, Lantern, and Base
D-402B Commercial Light Pole and Luminaire
D-403 Concrete Light Standard Base

SECTION 400 – INCIDENTAL CONSTRUCTION (continued)

D-404 Street Light Controller Foundation
D-405 Street Light Controller Cabinet
D-406 Street Light Electrical Diagram - Control Panel
D-407 Signage

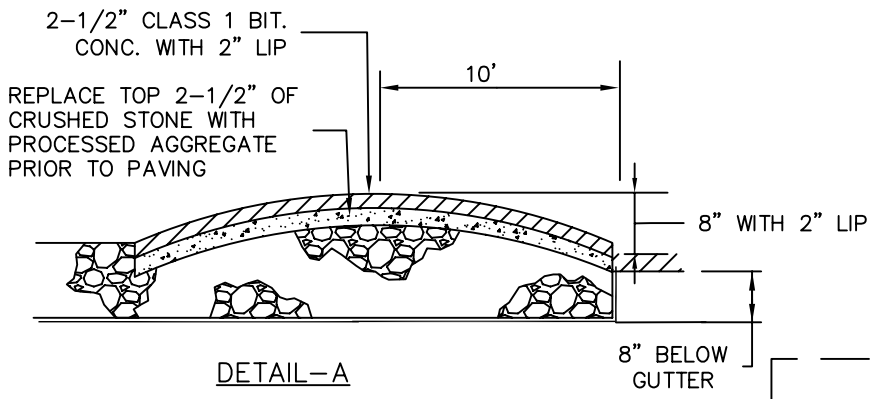

DETAIL-A

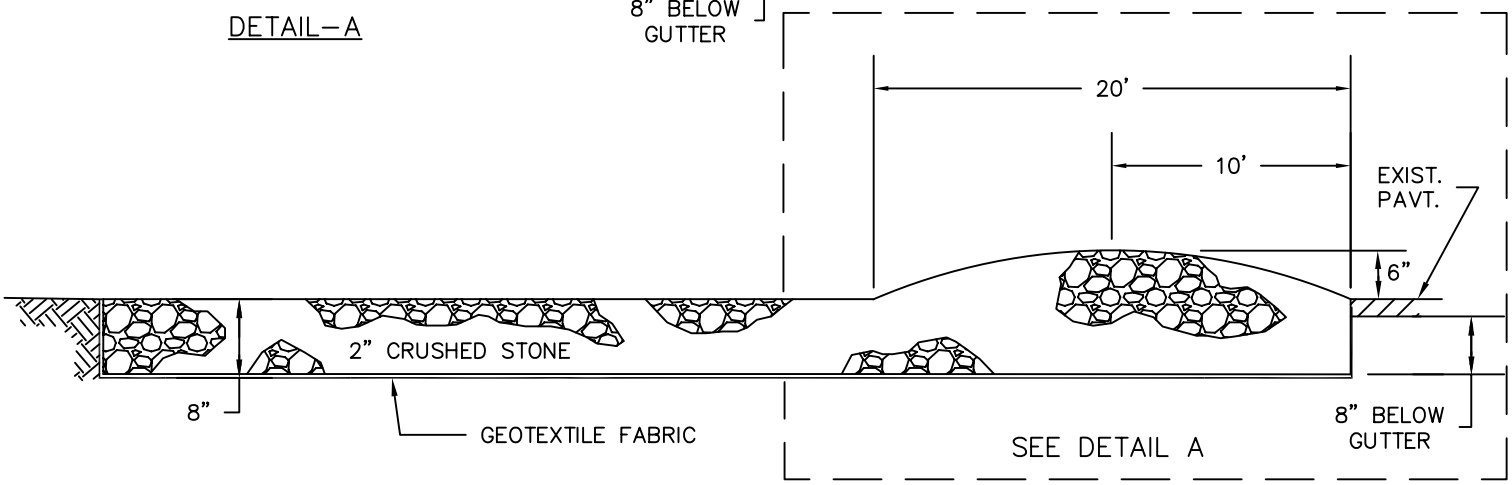

SECTION A-A

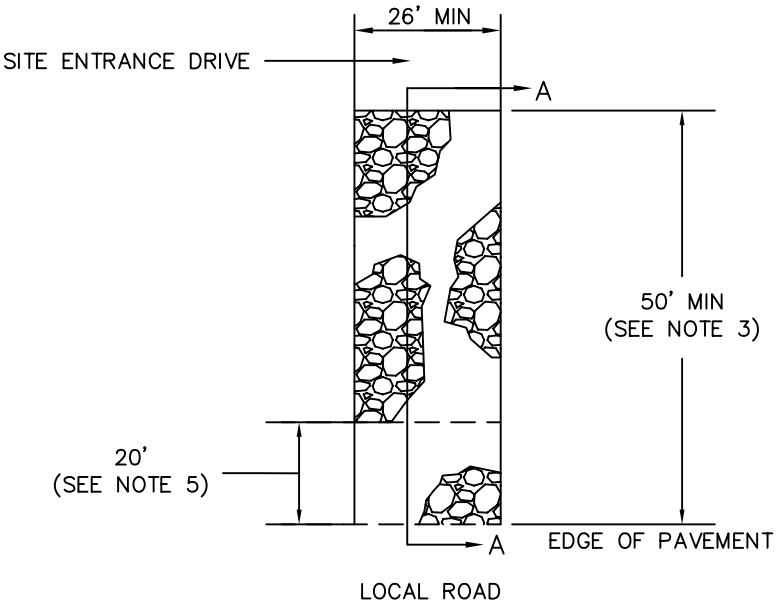

PLAN

NOTES:

1. THIS ENTRANCE PAD SHALL BE CONSTRUCTED PRIOR TO ANY CLEARING AND GRUBBING ACTIVITIES.
2. MAINTAIN ANTI-TRACKING SYSTEM IN GOOD CONDITION THROUGHOUT THE CONSTRUCTION PERIOD.
3. THE LENGTH OF THE ENTRANCE PAD SHALL BE INCREASED IF NECESSARY TO CONTROL THE TRACKING ONTO LOCAL ROADWAYS.
4. THE LOCAL ROADWAY SHALL BE SWEPT AS NECESSARY TO REMOVE ANY MATERIALS THAT HAVE BEEN TRACKED FROM THE SITE ENTRANCE DRIVE.
5. IF THE CONSTRUCTION SITE ENTRANCE WILL BE USED FOR MORE THAN 3 MONTHS, OR IF CONDITIONS REQUIRE, AND AS DIRECTED BY THE ENGINEER, THE SITE ENTRANCE DRIVE SHALL BE PAVED FOR THE FIRST 20 FEET.

TOWN OF WINDSOR
Engineering Department

SCALE: HOR. NTS / VER. DATE: MAY 2010

CONSTRUCTION SITE
ENTRANCE PAD
D-100

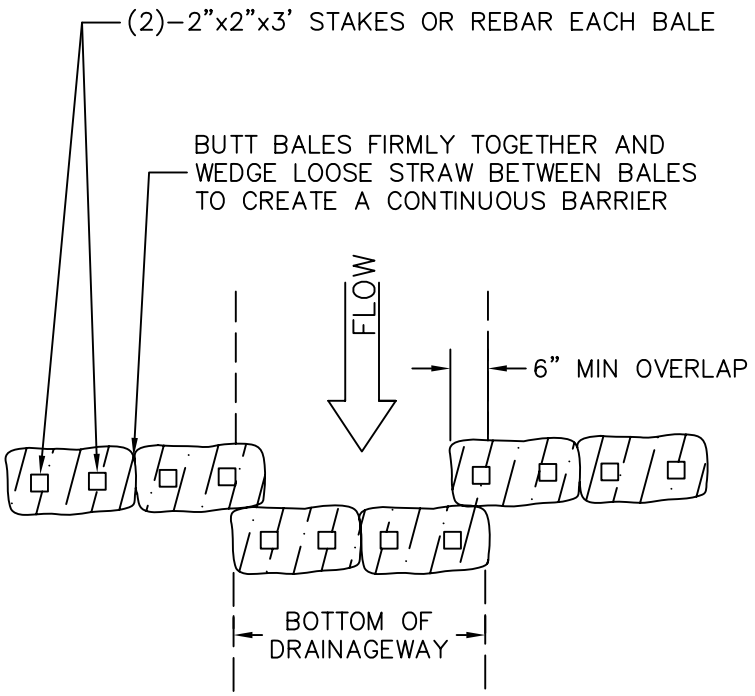

PLAN

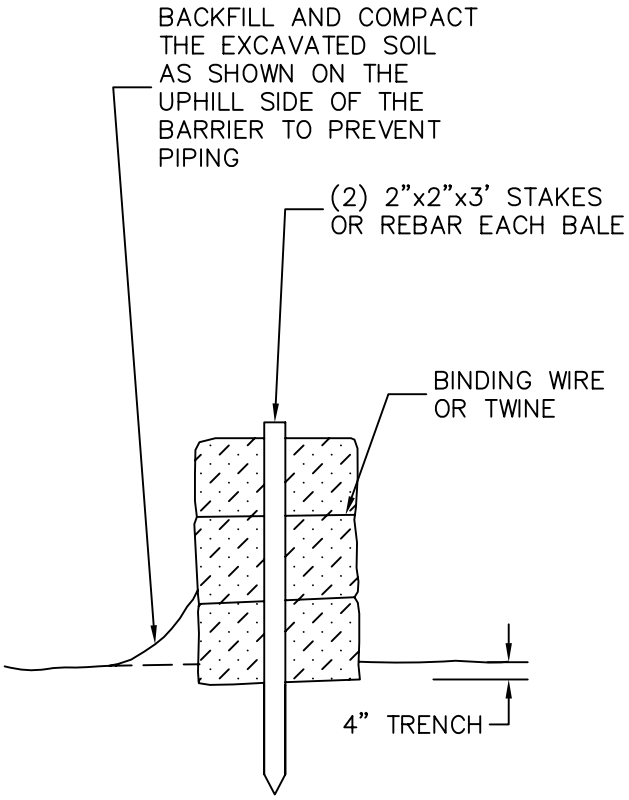

SIDE VIEW

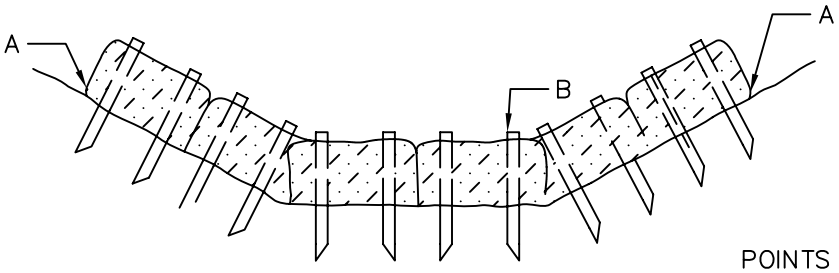

ELEVATION

POINTS "A" SHOULD BE HIGHER IN ELEVATION THAN POINTS 'B" IF SLOPE DICTATES.

NOTES:

1. HAY BALES SHALL BE MAINTAINED AND/OR REPLACED AS REQUIRED OR AS DIRECTED BY THE ENGINEER.
2. PLACE HAY BALES SUCH THAT TWINE OR BINDING WIRE IS PARALLEL TO THE EXISTING GROUND.

TOWN OF WINDSOR Engineering Department	BALED HAY/STRAW FOR EROSION CONTROL D–101
SCALE: HOR. NTS / VER. DATE: MAY 2010	

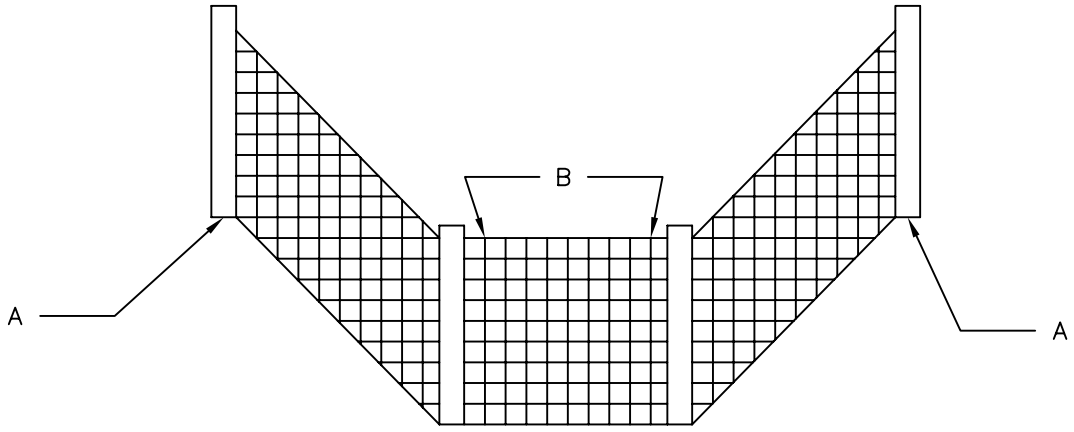

ELEVATION

POINTS 'A' SHOULD BE HIGHER THAN POINTS 'B' IF SLOPE DICTATES

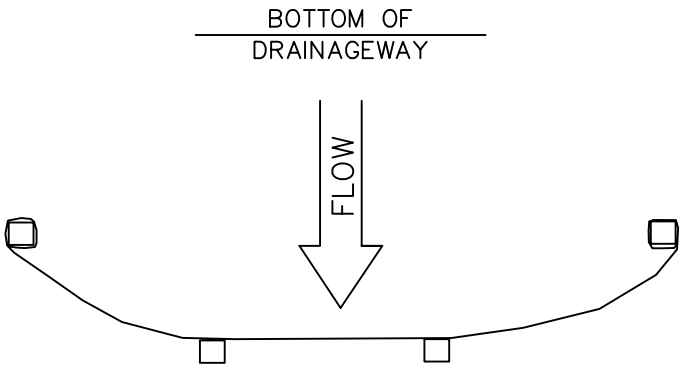

PLAN

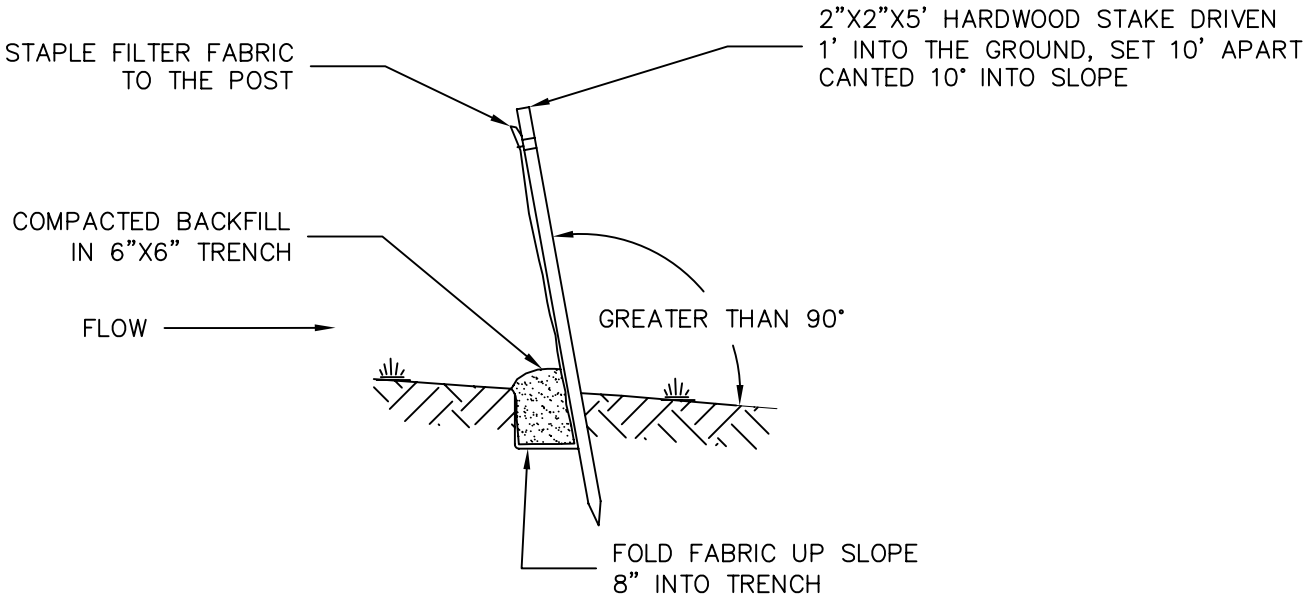

TOWN OF WINDSOR **Engineering Department**	FILTER FABRIC FENCE FOR EROSION CONTROL D–102
SCALE: HOR. NTS / VER. DATE: MAY 2010	

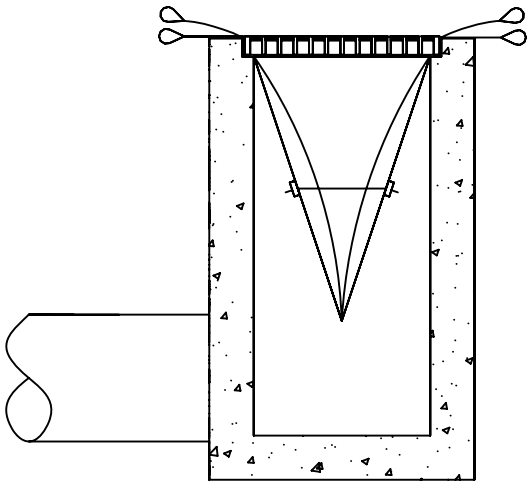

INSTALLATION DETAIL

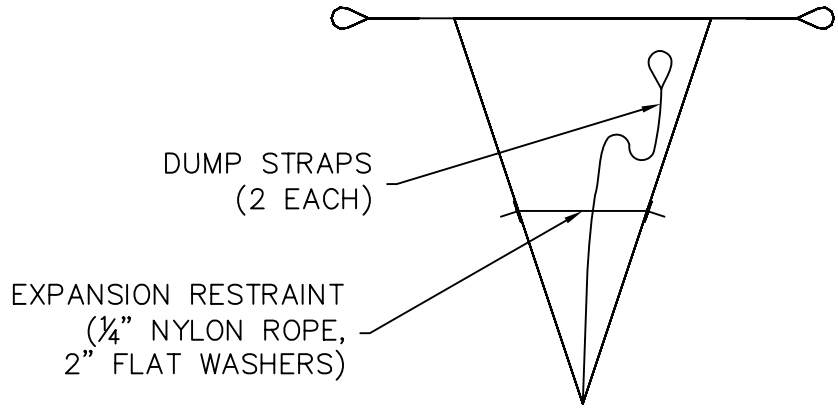

BAG DETAIL

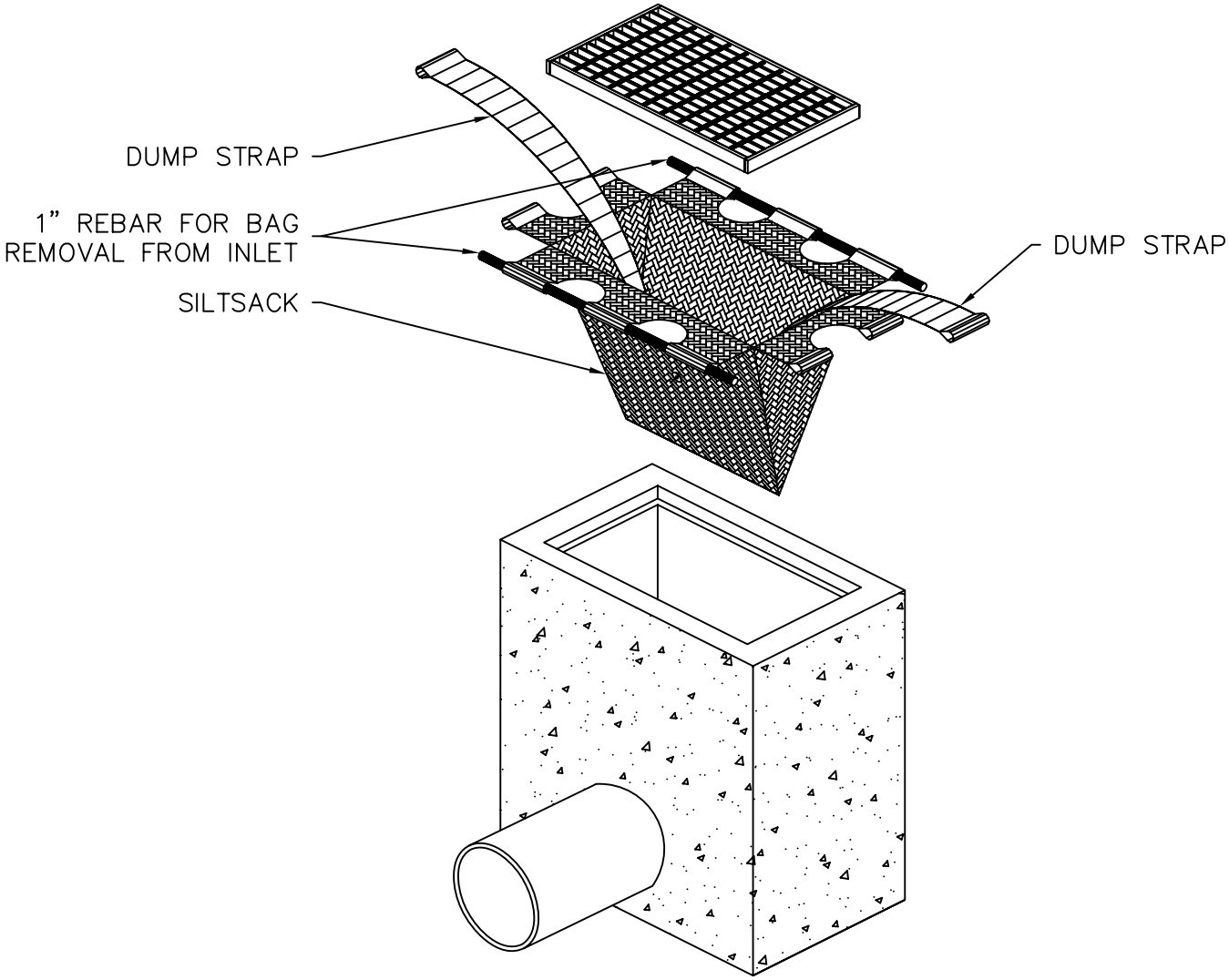

TOWN OF WINDSOR Engineering Department		SILTSACK AT CATCH BASIN D–103
SCALE: HOR. NTS / VER.	DATE: MAY 2010	

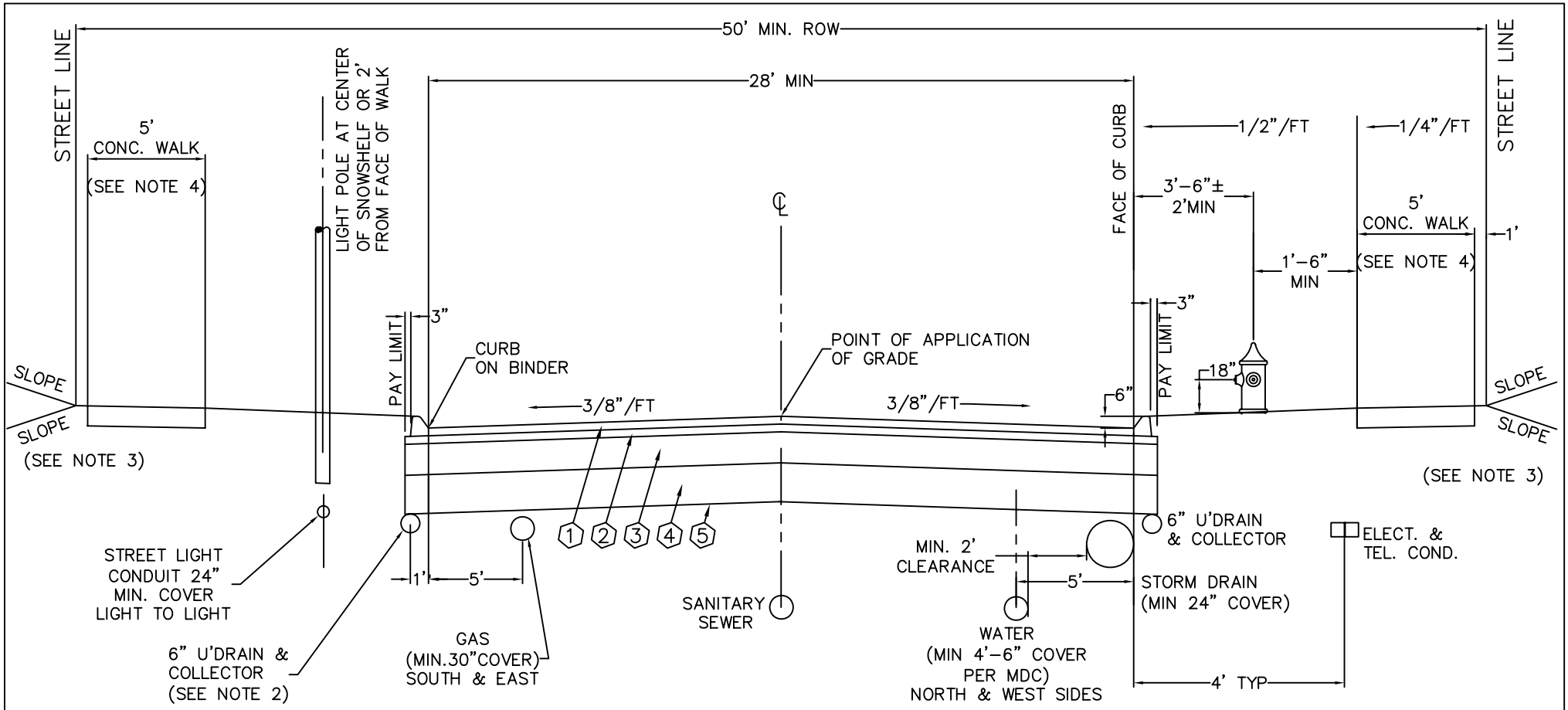

NOTES:

1. THIS ROADWAY CROSS SECTION IS THE MINIMUM ALLOWABLE FOR DEPTHS AND QUALITY OF MATERIALS, AND APPLIES TO ROADWAY CONSTRUCTION IN RESIDENTIAL DEVELOPMENTS ONLY. ALL ROADWAYS SHALL BE DESIGNED USING ACCEPTED ENGINEERING PRACTICES, AND SUBMITTED TO AND APPROVED BY THE ENGINEER.
2. 6" UNDERDRAIN & 8" COLLECTOR ELEVATION AS SHOWN ON PLANS.
3. 3:1 MAXIMUM SLOPE, UNLESS APPROVED BY THE ENGINEER.
4. CONCRETE WALK TO BE CONSTRUCTED ON AT LEAST ONE SIDE 50 FOOT R.O.W. AND ON BOTH SIDES FOR 60 FOOT R.O.W.

RESIDENTIAL:

1. 2" BIT. CONC. CLASS 2 WEAR COURSE
2. 2" BIT. CONC. CLASS 1 OR 2 BINDER COURSE
3. 8" PROCESSED AGGREGATE BASE
4. 10" GRAVEL SUBBASE (WHERE REQUIRED)
5. STABLE, PREPARED SUB-GRADE

TOWN OF WINDSOR
Engineering Department

SCALE: HOR. NTS / VER. DATE: MAY 2010

ROADWAY CROSS SECTION
D-200

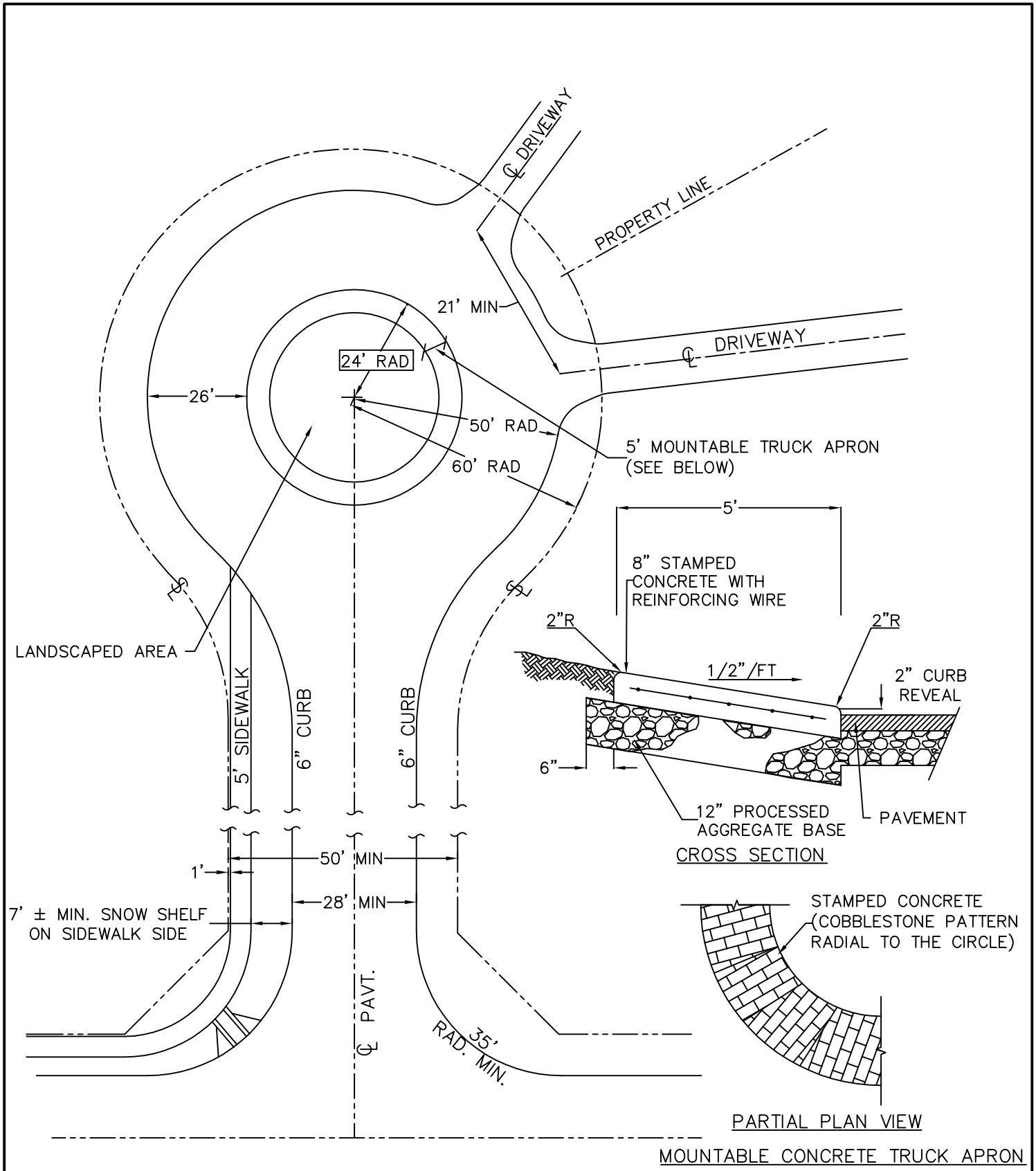

TOWN OF WINDSOR
Engineering Department

CUL-DE-SAC CONSTRUCTION
D-201

SCALE: HOR. NTS / VER. DATE: NOV 2010

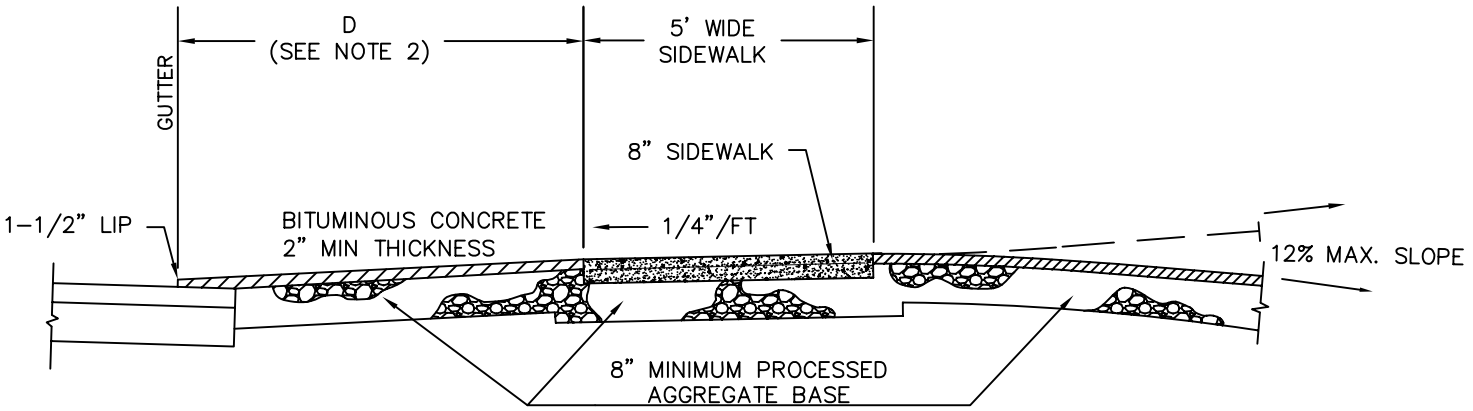

BITUMINOUS DRIVEWAY SECTION (RESIDENTIAL)

NOTES:

1. ALL CURBING SHALL BE TRANSITIONED PER THE FOLLOWING LENGTHS TO MEET DRIVEWAYS:
   GRANITE AND CONCRETE CURB, 3' AND 4' TRANSITION SECTION
   BITUMINOUS CURB, 2' TRANSITION SECTION.
2. WHERE SNOW SHELF IS 5' OR GREATER, THE ELEVATION AT FRONT OF SIDEWALK EQUALS GUTTER ELEVATION + 6"+ (D X 0.04). WHERE SNOW SHELF IS LESS THAN 5' THE SIDEWALK ELEVATION SHALL BE APPROVED BY THE ENGINEER.
3. FROM THE FRONT EDGE OF THE SIDEWALK, DRIVEWAY APRONS SHALL BE FLARED 3' AT THE GUTTER ON BOTH SIDES TO MEET THE CURB TRANSITION.

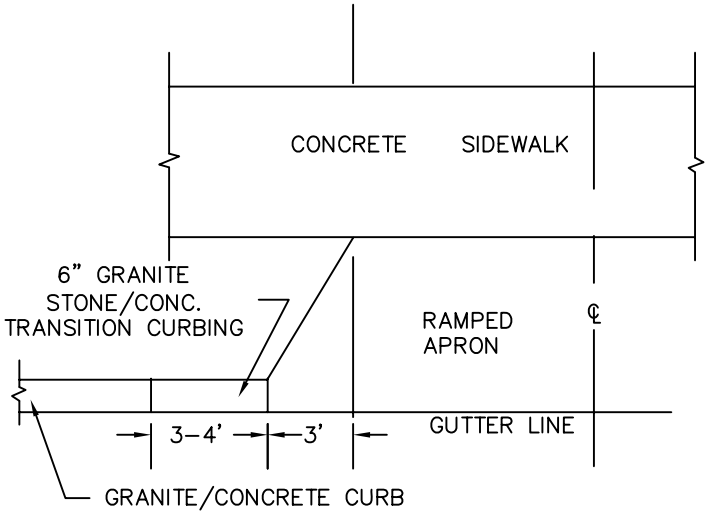

HALF PLAN

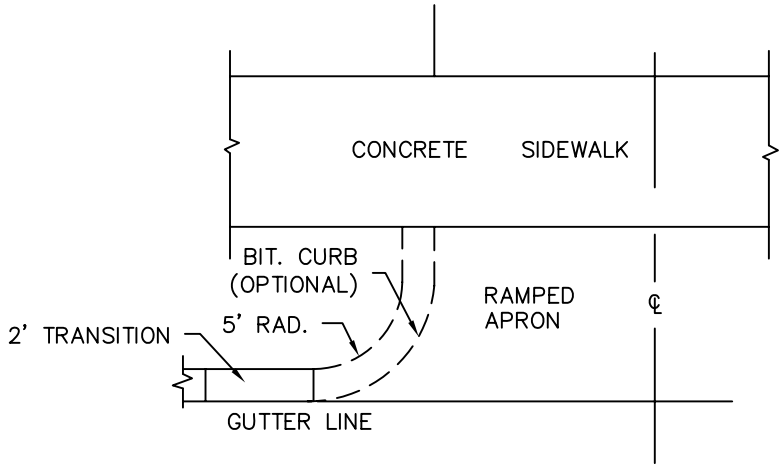

HALF PLAN

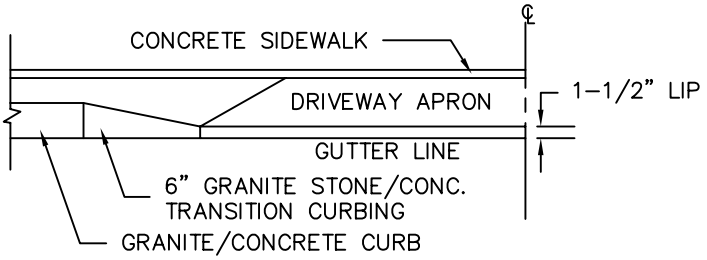

HALF ELEVATION

BITUMINOUS CONCRETE DRIVEWAY APRON
ABUTTING GRANITE OR CONCRETE CURB

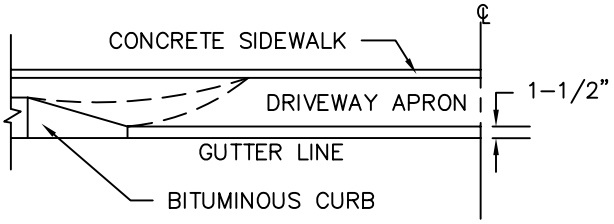

HALF ELEVATION

BITUMINOUS CONCRETE DRIVEWAY APRON
ABUTTING BITUMINOUS CONCRETE CURB

TOWN OF WINDSOR
Engineering Department

SCALE: HOR. NTS / VER. DATE: MAY 2010

BITUMINOUS CONCRETE
RESIDENTIAL DRIVEWAY
D-202

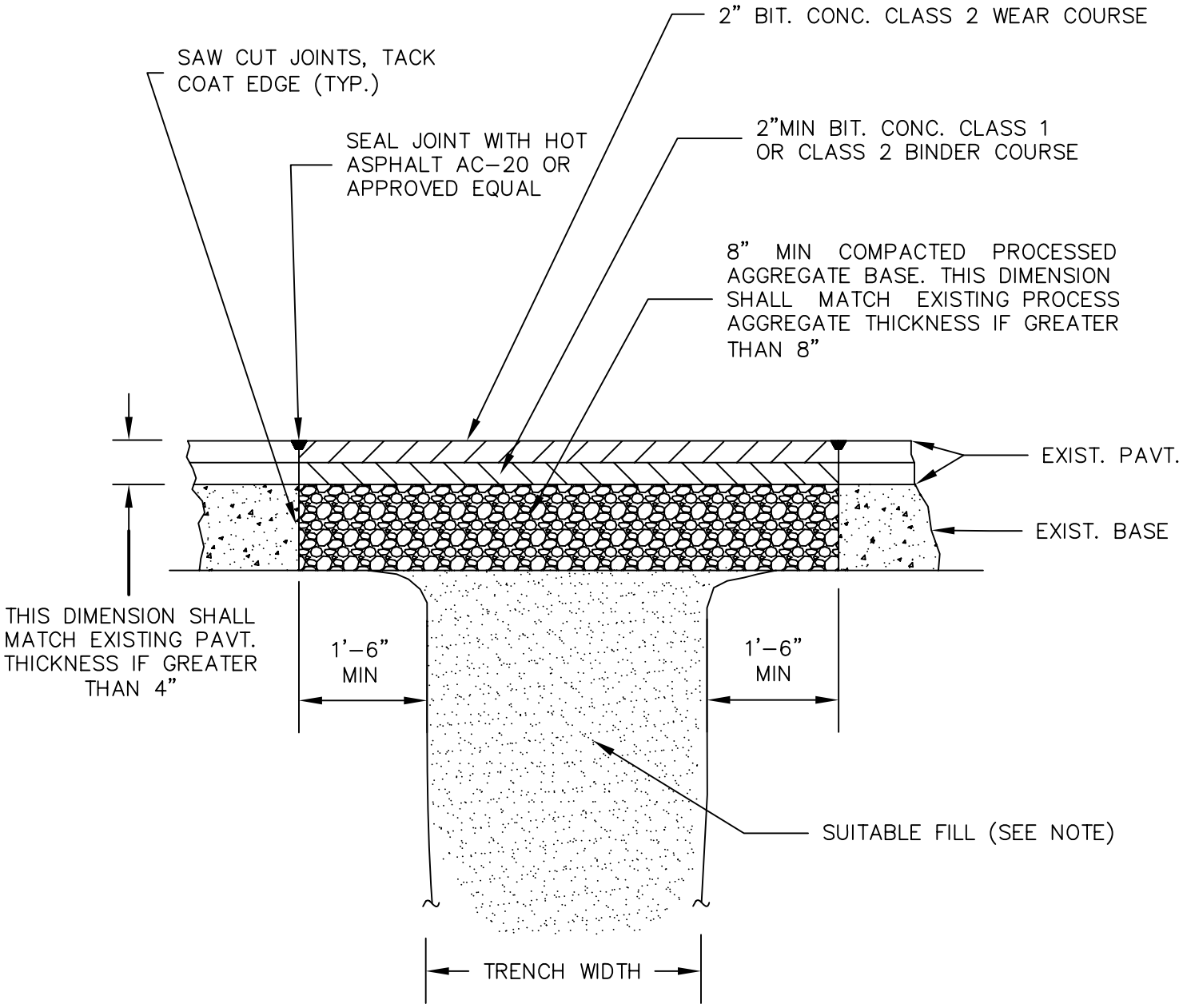

NOTES:

1. SUITABLE FILL AND PROCESSED AGGREGATE BASE SHALL BE COMPACTED 95% PER AASHTO T-180 METHOD 'D'.
2. IF GREATER THAN 5 LINEAR FEET OF EXISTING PAVEMENT MARKINGS HAVE BEEN REMOVED THEN THE PAVEMENT MARKINGS SHALL BE REPLACED WITH EITHER HOT-APPLIED OR EPOXY RESIN PAVEMENT MARKINGS TO MATCH EXISTING CONDITIONS.

TOWN OF WINDSOR
Engineering Department

SCALE: HOR. NTS / VER. DATE: MAY 2010

BITUMINOUS CONCRETE PAVEMENT REPAIRS

D-203

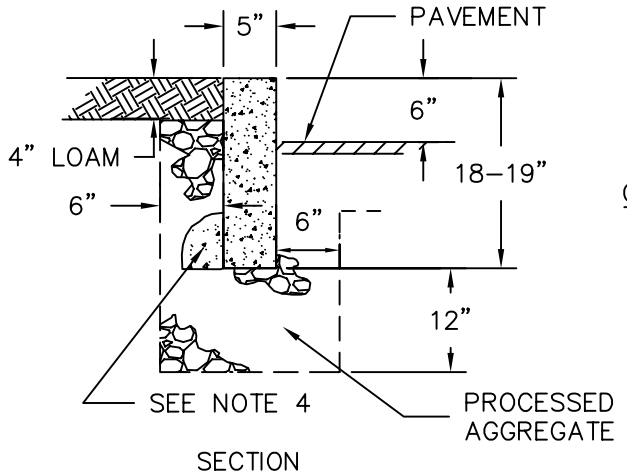

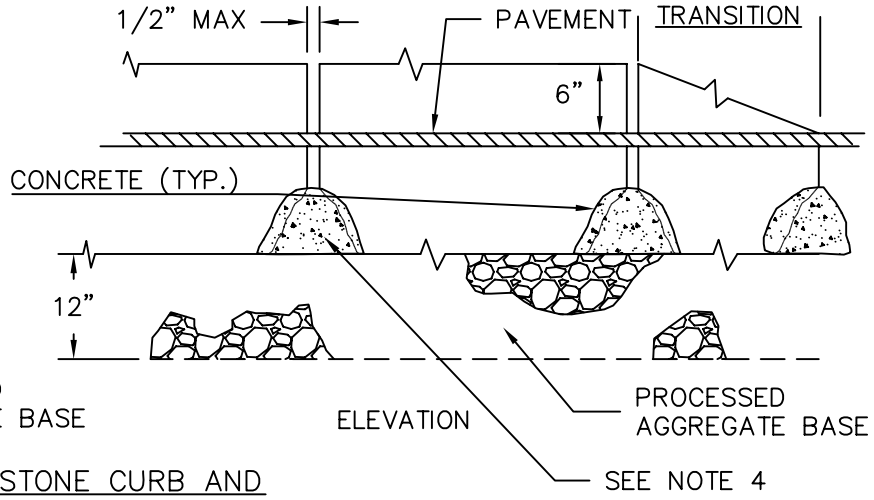

GRANITE STONE CURB AND
GRANITE TRANSITION AT DRIVEWAYS

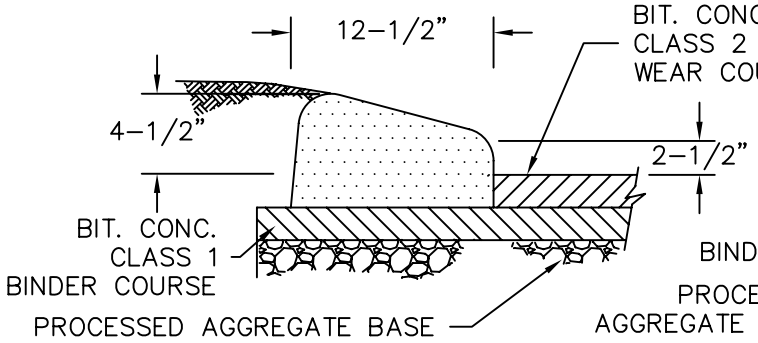

BITUMINOUS CONCRETE
CAPE COD CURB

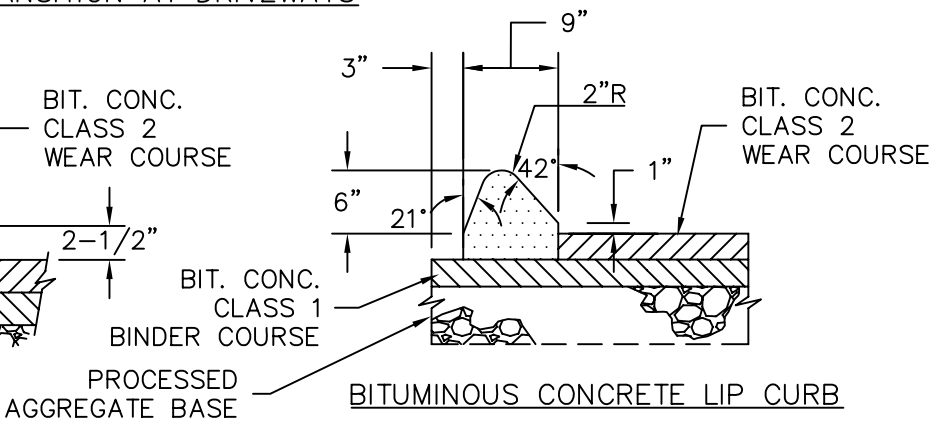

BITUMINOUS CONCRETE LIP CURB

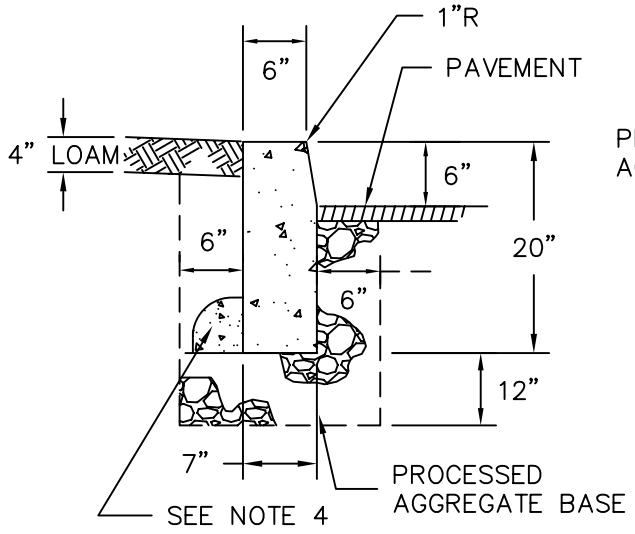

CONCRETE CURB

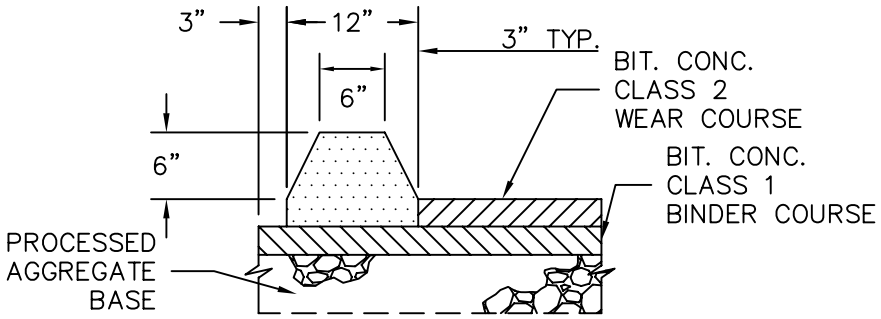

BITUMINOUS CONCRETE FLAT TOP CURB

NOTES:

1. MIN. LENGTH OF GRANITE CURB SHALL BE 4'–0".
2. GRANITE CURB FINISH SHALL BE SAWN TOP & SPLIT FACE JOINTED.
3. GRANITE CURB WITH A RADIUS OF 100' OR LESS SHALL BE BUILT OF CURVED GRANITE CURB.
4. CLASS "C" CONCRETE SHALL BE PROVIDED AS BACK SUPPORT TO FILL JOINT OPENING OF GRANITE AND CONCRETE CURBING AND AS BACK SUPPORT THROUGHOUT CURVED GRANITE AND CONCRETE CURBING, AS SHOWN.
5. A TACK COAT SHALL BE USED UNDER ALL BITUMINOUS CONCRETE CURBING.
6. MORTAR SHALL BE USED IN ALL JOINTS FOR CONCRETE AND GRANITE CURBING.

TOWN OF WINDSOR
Engineering Department

CURB TYPES
D–204

SCALE: HOR. NTS / VER.
DATE: MAY 2010

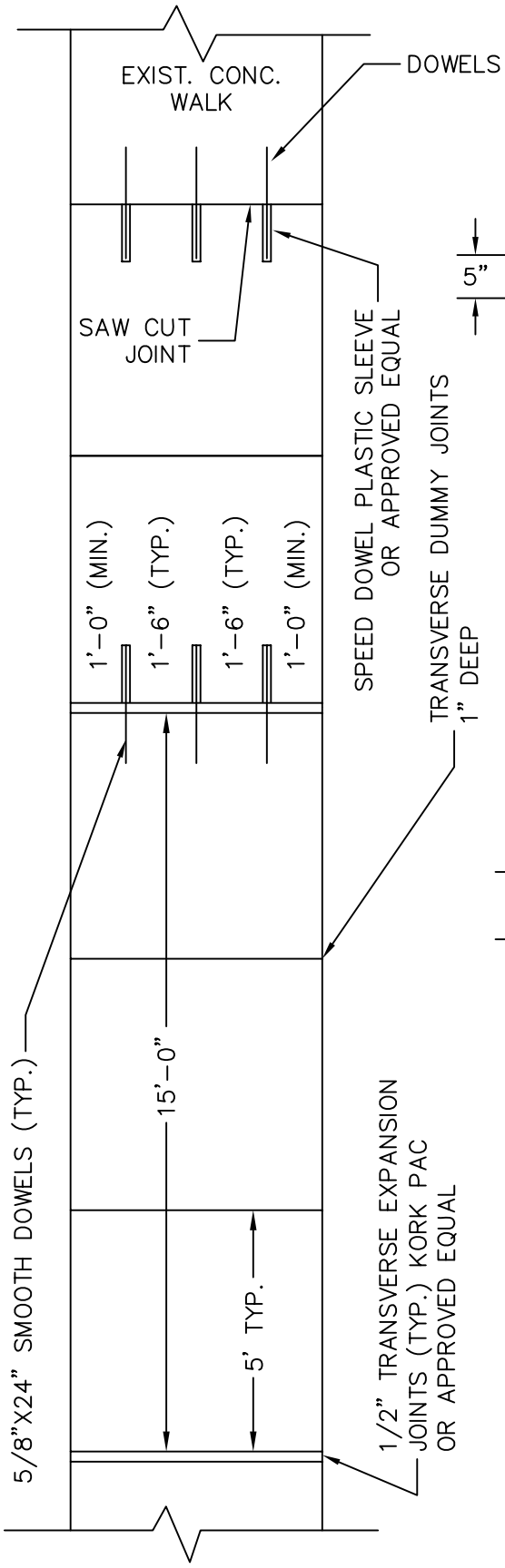

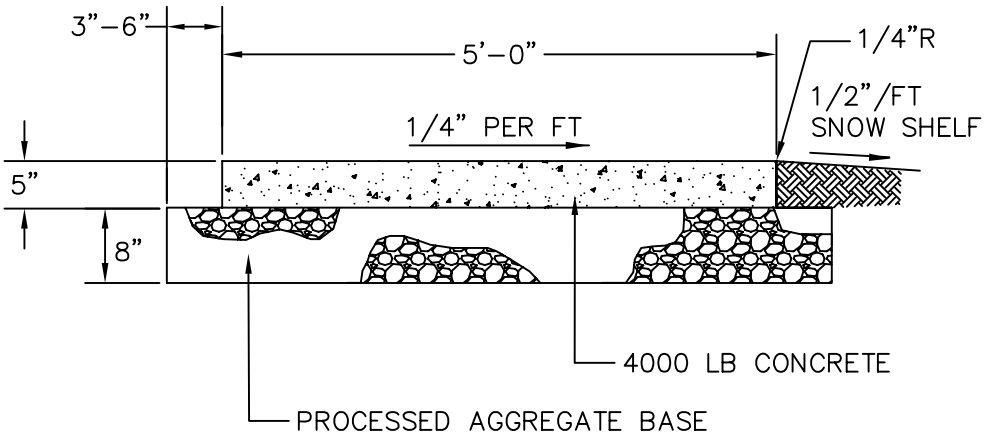

TYPICAL SECTION
5" CONCRETE SIDEWALK

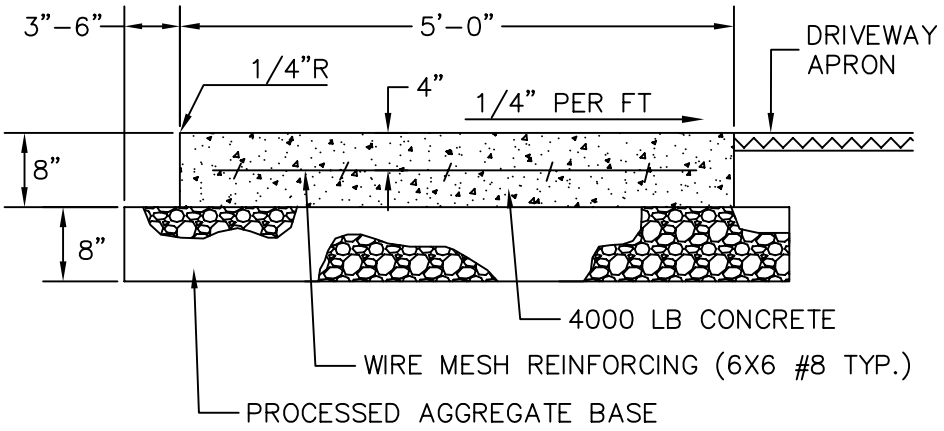

TYPICAL SECTION
8" CONCRETE SIDEWALK
(DRIVEWAY)

NOTES:
1. 1'-0" (TYP.) DOWEL SPACING FOR 4' WIDE CONCRETE WALK.
2. ALL TOOL MARKS TO BE TROWELED, FINISH CONCRETE WITH A FINE BROOM.

TOWN OF WINDSOR
Engineering Department

SCALE: HOR. NTS / VER. DATE: MAY 2010

CONCRETE SIDEWALKS
D-205

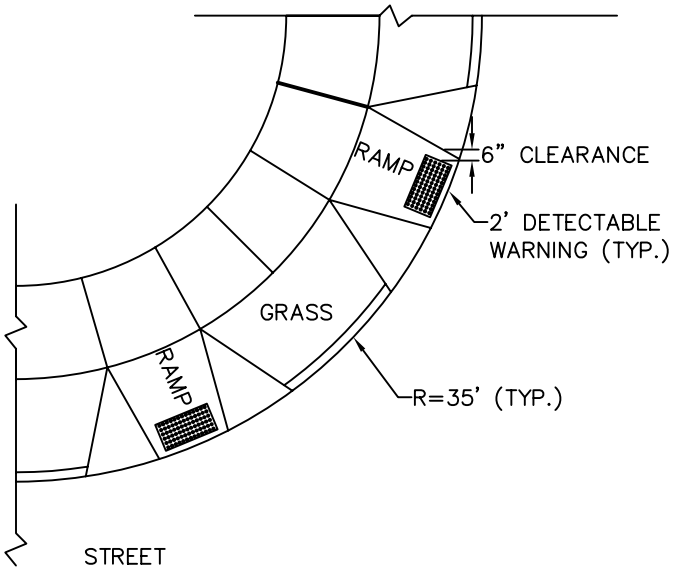

PLAN

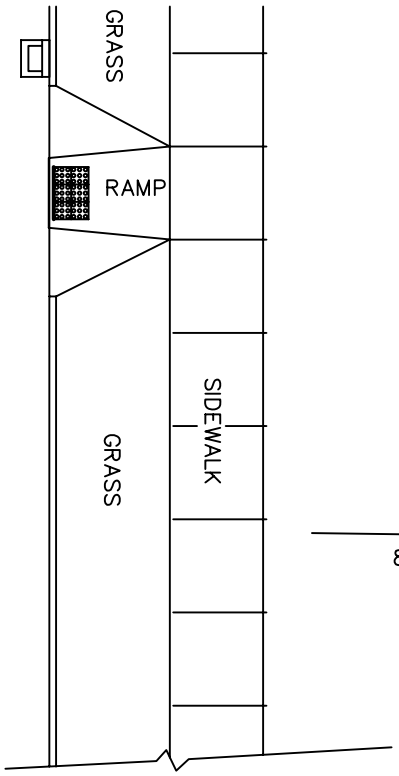

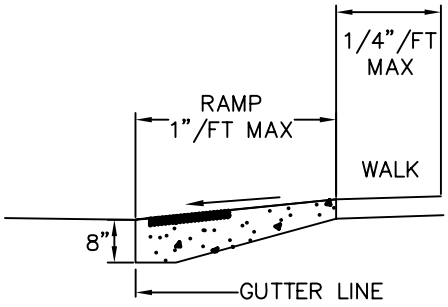

SECTION

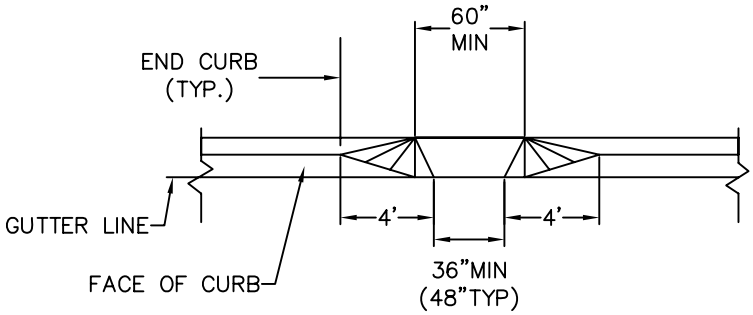

FRONT
SIDEWALK RAMP

NOTES:

1. ALL SIDEWALK RAMPS SHALL BE CONSTRUCTED IN ACCORDANCE WITH THE DETAILS FOR 8" CONCRETE SIDEWALK (DRIVEWAY), EXCEPT THAT THE FINAL TEXTURE OF THE CONCRETE SURFACE SHALL BE A COARSE BROOM FINISH TRANSVERSE TO THE SLOPE OF THE RAMP.
2. CARE SHALL BE TAKEN TO ASSURE A UNIFORM GRADE ON THE RAMP AND SLOPE OF SIDES TO RAMP, FREE OF SAGS AND SHORT GRADE CHANGES.
3. ALL SIDEWALK RAMPS SHALL BE CONSTRUCTED OF PORTLAND CEMENT CONCRETE.
4. DRAINAGE DESIGN IN THE VICINITY OF SIDEWALK RAMPS SHALL BE CONSIDERED AN INTEGRAL PART OF THE DESIGN OF THESE RAMPS. NO DRAINAGE STRUCTURES SHALL BE WITHIN THE LIMITS OF THE SIDEWALKS AND CROSSWALKS.
5. WIDTH OF SIDEWALK RAMP SHALL BE MIN. 36".
6. SIDEWALK RAMPS SHALL CONFORM TO ADA REQUIREMENTS.

TOWN OF WINDSOR
Engineering Department

CONCRETE SIDEWALK RAMPS
D-206

SCALE: HOR. NTS / VER.
DATE: MAY 2010

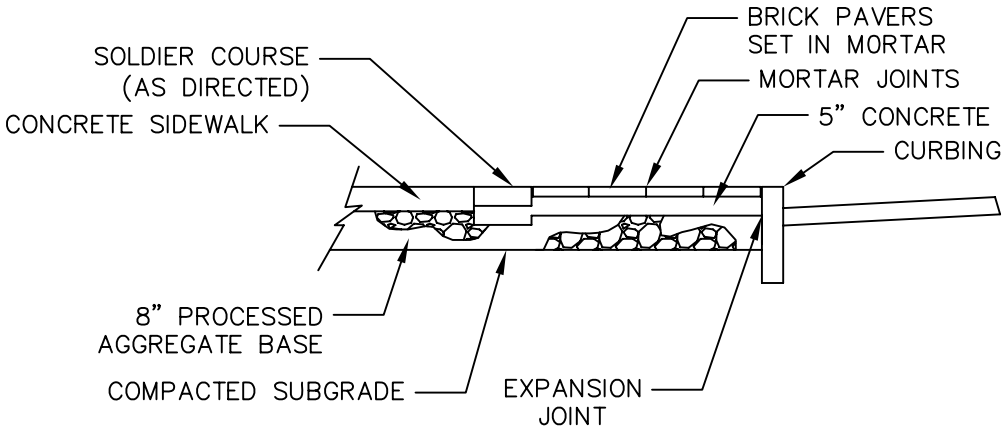

MORTAR SET BRICK PAVERS ALONG SIDEWALK

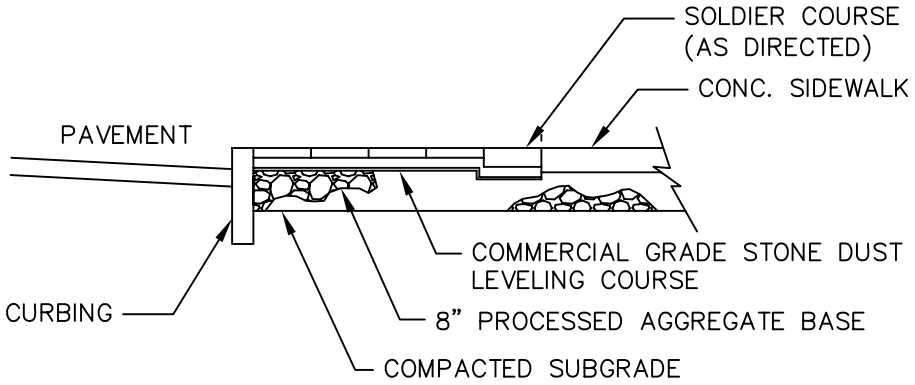

DRY SET BRICK PAVERS ALONG SIDEWALK

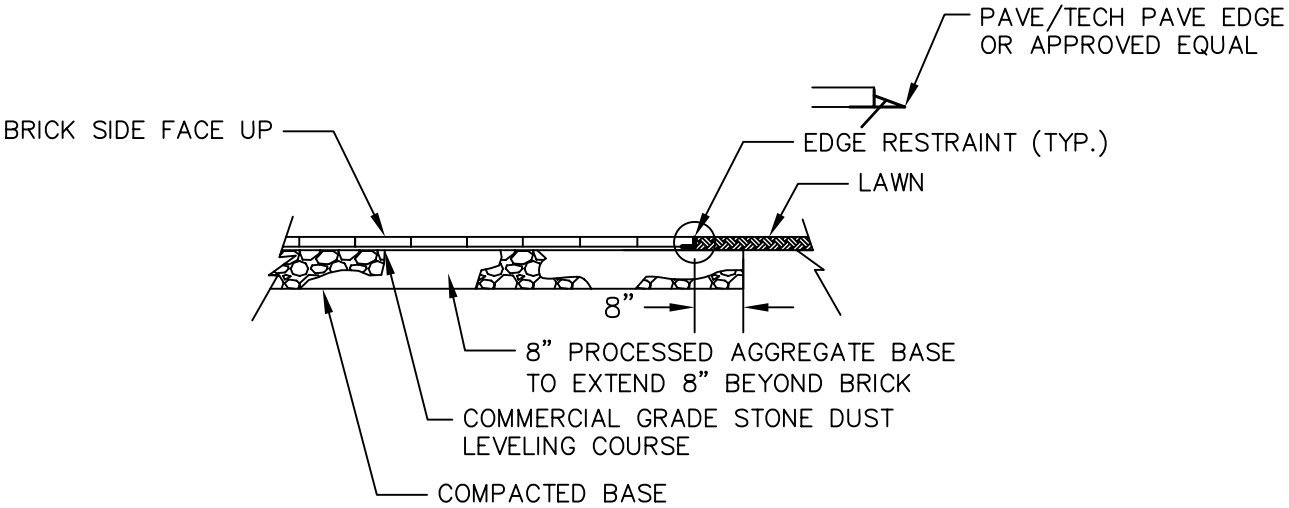

DRY SET BRICK PAVERS ALONG LAWN

NOTE:
BUTT DRYSET BRICKS TOGETHER. JOINTS TO BE FILLED WITH POLYMERIC STABILIZING SAND, STONE DUST, OR MASONRY SAND FOR PAVERS

TOWN OF WINDSOR
Engineering Department

SCALE: HOR. NTS VER. DATE: MAY 2010

BRICK PAVERS
D-207

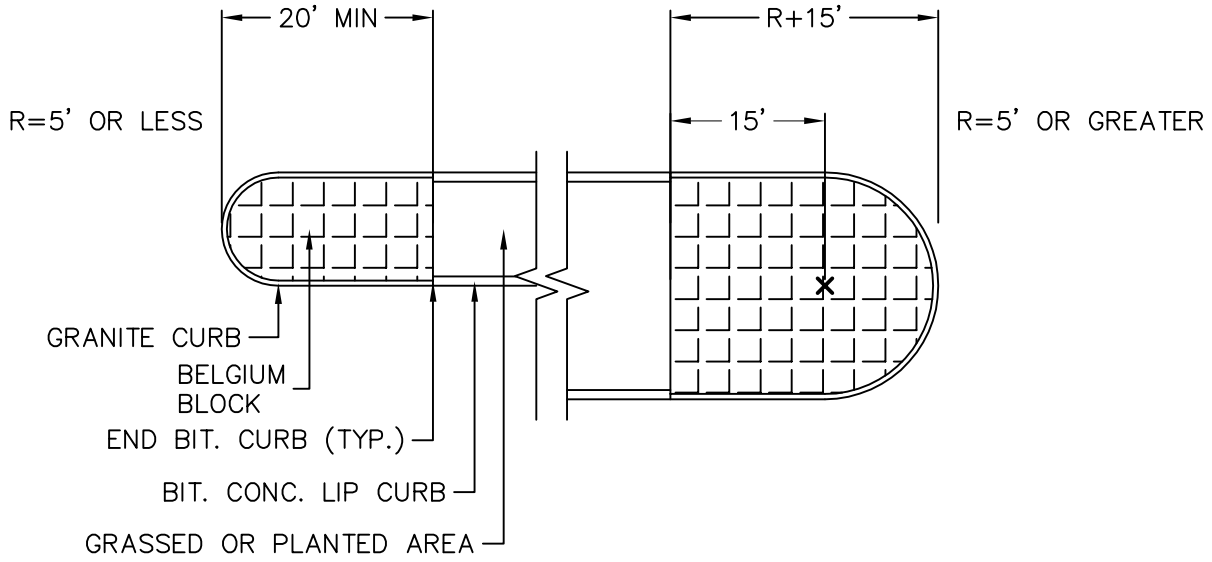

PLAN VIEW

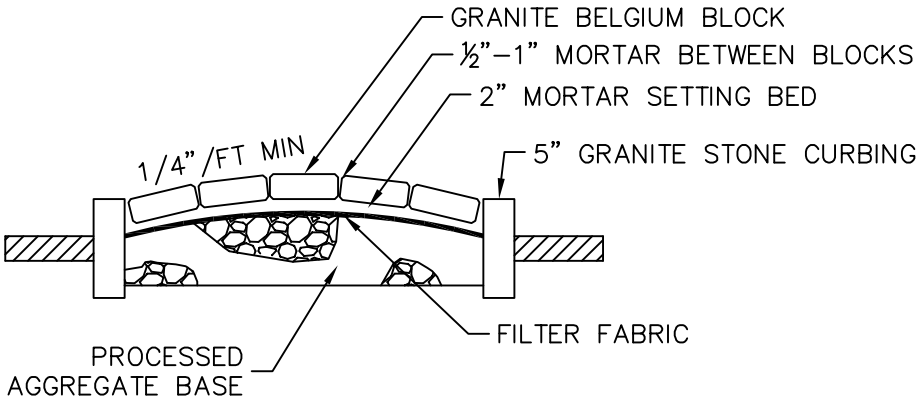

GRANITE BELGIUM BLOCK

NOTES:

1. MINIMUM LENGTH OF GRANITE CURB SHALL BE 4'–0".
2. GRANITE CURB FINISH SHALL BE SAWN TOP & SPLIT FACE JOINTED.
3. GRANITE CURB WITH A RADIUS OF 100' OR LESS SHALL BE BUILT OF CURVED GRANITE CURB.
4. CLASS "C" CONCRETE SHALL BE PROVIDED AS BACK SUPPORT TO FILL JOINT OPENING OF GRANITE CURBING AND AS BACK SUPPORT THROUGHOUT CURVED GRANITE.
5. MORTAR OR OTHER APPROVED FILLER SHALL BE USED IN ALL JOINTS FOR GRANITE CURBING.

TOWN OF WINDSOR
Engineering Department

SCALE: HOR. NTS / VER. NTS DATE: AUGUST 2010

MEDIAN DETAIL
D–208

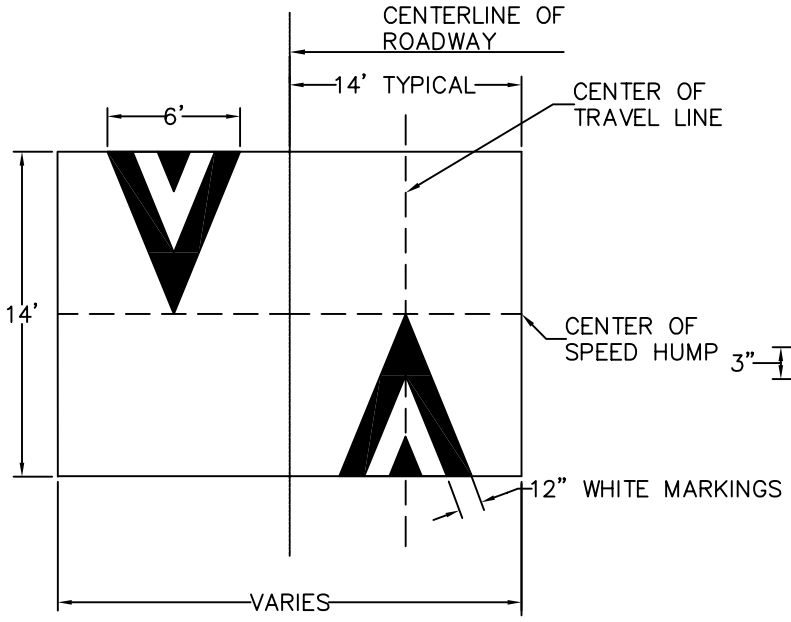

PAVEMENT MARKINGS

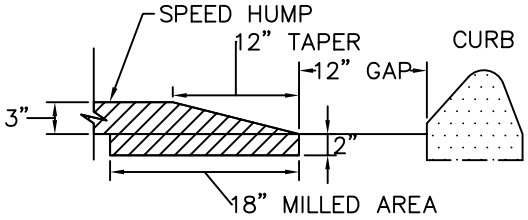

CROSS-SECTION
ROADWAY EDGE TREATMENT
W/CURB

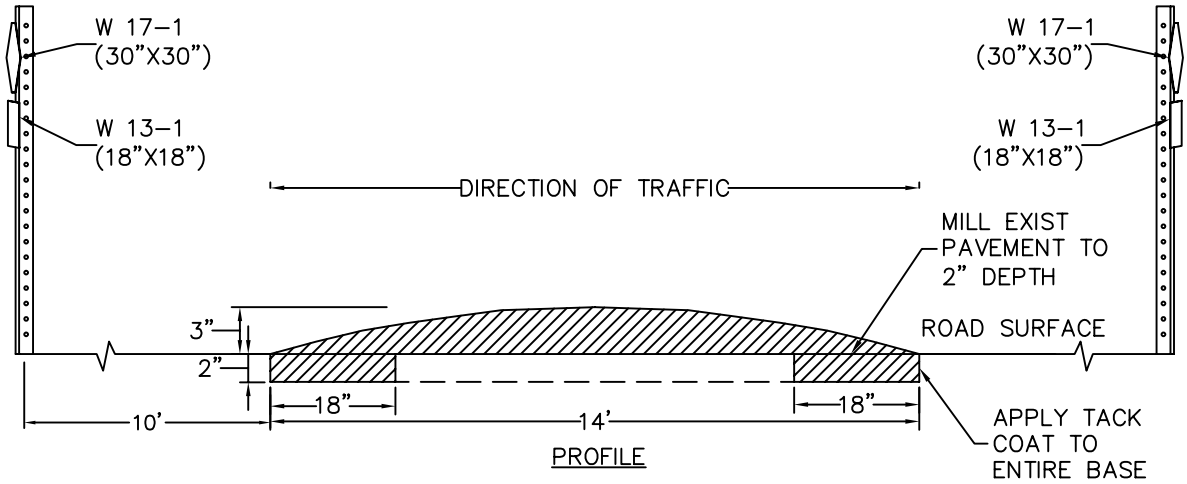

PROFILE

14 FOOT PARABOLIC SPEED HUMP DEVELOPMENT								
DISTANCE (FEET)	0.0	1.0	2.0	3.0	4.0	5.0	6.0	7.0
FINISHED HEIGHT (INCHES)	0.0	0.8	1.5	2.0	2.4	2.8	2.9	3.0

NOTES:

1. EXISTING PAVEMENT SHALL BE MILLED AROUND ENTIRE PERIMETER OF SPEED HUMP.
2. SPEED HUMPS SHALL BE CONSTRUCTED OF CLASS 2 BITUMINOUS CONCRETE.
3. TACK COAT SHALL BE APPLIED BENEATH THE ENTIRE BASE OF THE SPEED HUMP.
4. JOINTS SHALL BE SEALED WITH HOT ASPHALT MATERIAL, AC-20 OR APPROVED EQUAL.
5. PAVEMENT MARKINGS SHALL BE 12" WHITE EPOXY RESIN PAVEMENT MARKINGS APPLIED IN ACCORDANCE WITH TOWN WRITTEN SPECIFICATION 445 "PAVEMENT MARKINGS".
6. WARNING SIGN, W17-1 "SPEED HUMP" (30" X 30"), SHALL BE MOUNTED IN ACCORDANCE WITH TOWN STANDARD WRITTEN SPECIFICATION 450 "SIGNAGE" ON THE RIGHT SIDE OF THE ROADWAY 10 FEET BEFORE THE START OF THE SPEED HUMP ON BOTH APPROACHES.
7. SUPPLEMENTAL SIGN, W13-1 (18" X 18") WITH APPROPRIATE ADVISORY SPEED, SHALL BE INSTALLED BENEATH THE "SPEED HUMP" SIGN.
8. IF A SERIES OF SPEED HUMPS EXISTS IN CLOSE PROXIMITY, THE ADVISORY SPEED SIGN MAY BE ELIMINATED ON ALL BUT THE FIRST SPEED HUMP SIGN, FROM EACH APPROACH, IN THE SERIES.

TOWN OF WINDSOR
Engineering Department

SCALE: HOR. NTS / VER. NTS DATE: MAY 2010

SPEED HUMP
D-209

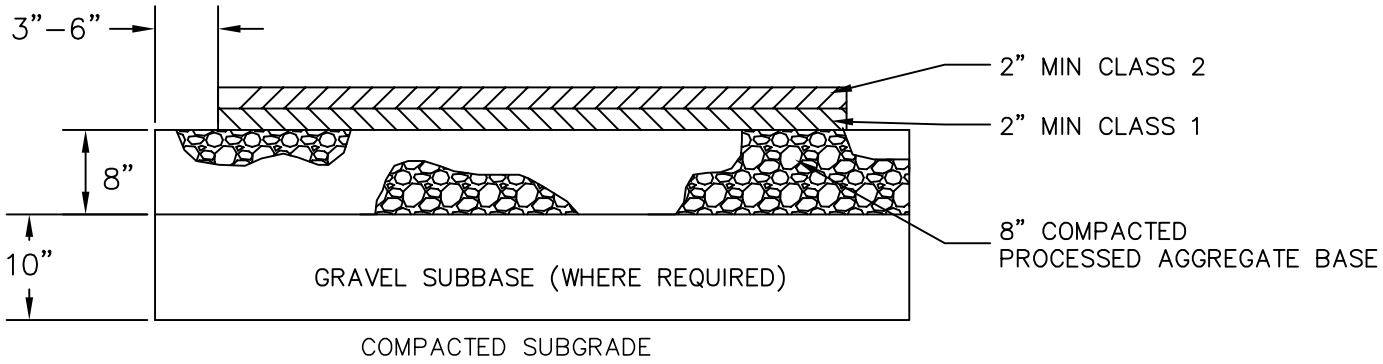

NOTES:

1. CONSTRUCTION SHALL BE EXCAVATED OR FILLED 12 INCHES BELOW FINISHED GRADE AND EXTEND 6 INCHES MINIMUM BEYOND THE OUTSIDE EDGES OF THE PAVED AREAS OR 3 INCHES BEYOND CURBING (IF CURBING IS INSTALLED).
2. SUBBASE SHALL BE PROPERLY GRADED TO FORM A UNIFORM BASE.
3. BASE SHALL BE A MINIMUM 8 INCHES OF PROCESSED AGGREGATE BASE AND SHALL BE COMPACTED IN 4–INCH LIFTS UTILIZING A ROLLER WEIGHING A MINIMUM OF 10,000 POUNDS.
4. BITUMINOUS CONCRETE SHALL BE PLACED AND COMPACTED IN 2–INCH LIFTS TO THE REQUIRED DEPTH (4 INCHES MINIMUM) USING A ROLLER WEIGHTING A MINIMUM 10,000 POUNDS WITH NO COLD JOINTS.
5. AT ANY POINT WHERE A NEW PAVEMENT WILL MATCH EXISTING PAVEMENT, THE EXISTING PAVEMENT SHALL BE SAWCUT VERTICALLY TO A SMOOTH EDGE AND A TACK COAT APPLIED. AFTER PLACEMENT OF THE PAVEMENT, THE JOINT SHALL BE SEALED WITH A HOT ASPHALT MATERIAL, AC–20 OR APPROVED EQUIVALENT.
6. TACK COAT SHOULD BE APPLIED BETWEEN LIFTS TO ALL VERTICAL JOINTS AND ON ALL SURFACES THAT HAVE BEEN IN PLACE FOR LONGER THAN 72 HOURS.

TOWN OF WINDSOR
Engineering Department

SCALE: HOR. NTS VER. DATE: NOV 2010

BITUMINOUS CONCRETE
COMMERCIAL PARKING AREAS
AND DRIVES D–210

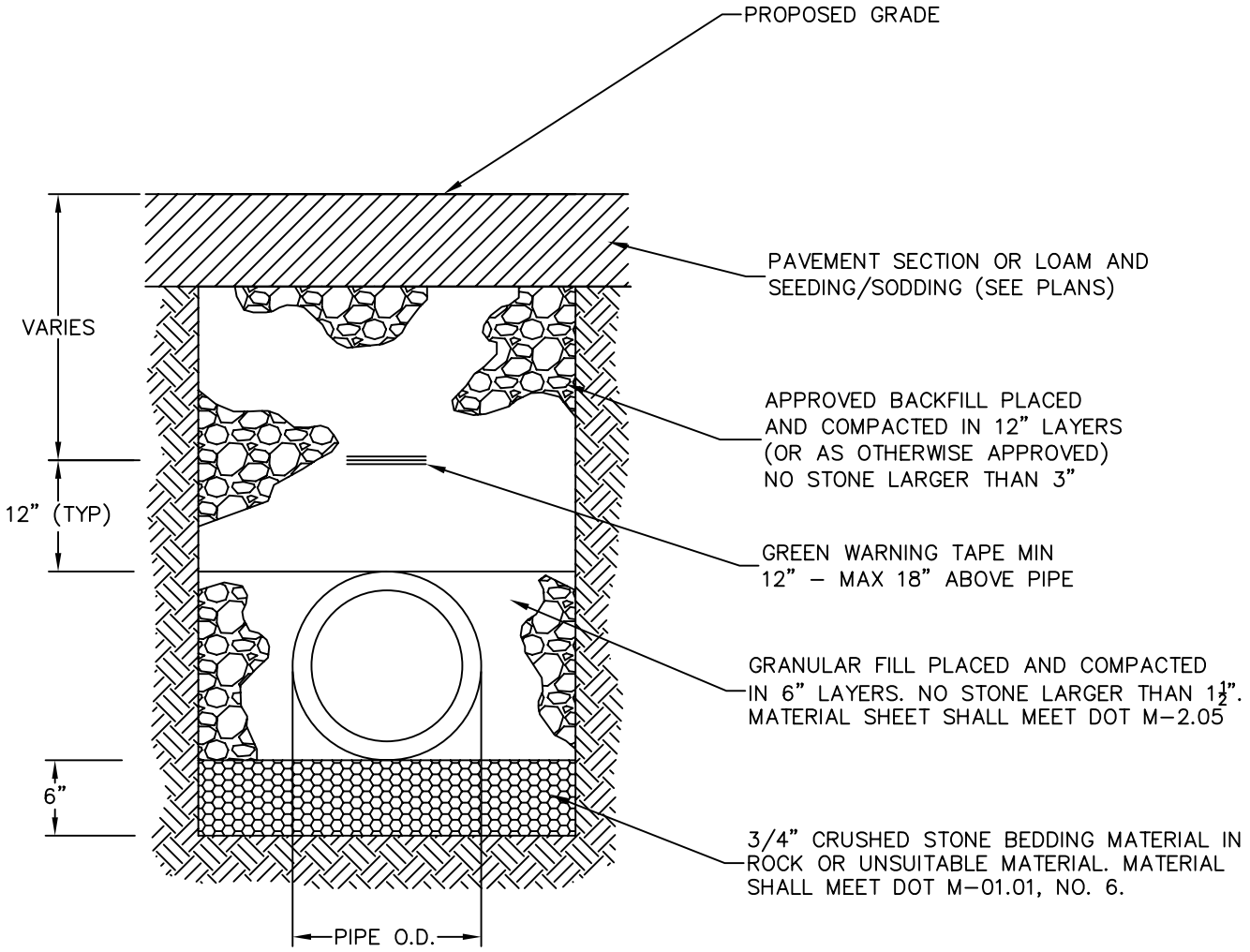

SEE TYPICAL PAVEMENT SECTION
FOR LOCATION OF PIPES.

NOTES:
1. ALL CONCRETE PIPE TO BE MINIMUM CLASS IV UNLESS OTHERWISE SPECIFIED.
2. USE WATERTIGHT GASKETS IN ALL PIPE JOINTS.

TOWN OF WINDSOR
Engineering Department

SCALE: HOR. NTS / VER. DATE: MAY 2010

DRAINAGE TRENCH
D–300

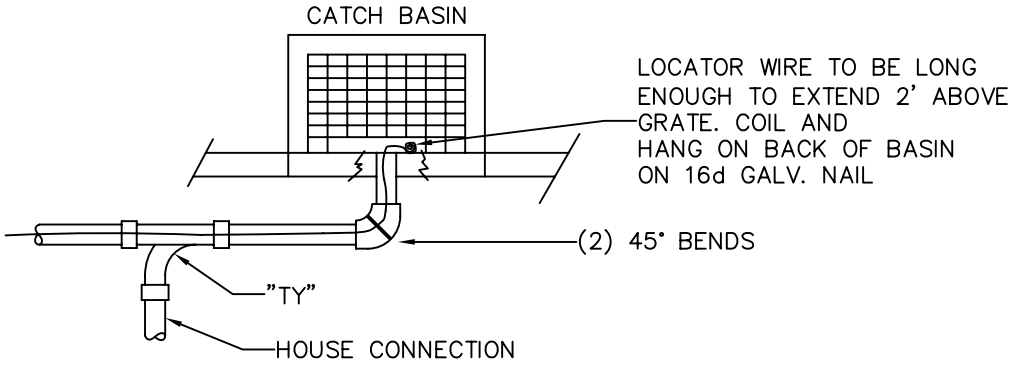

COLLECTOR / UNDERDRAIN DETAIL

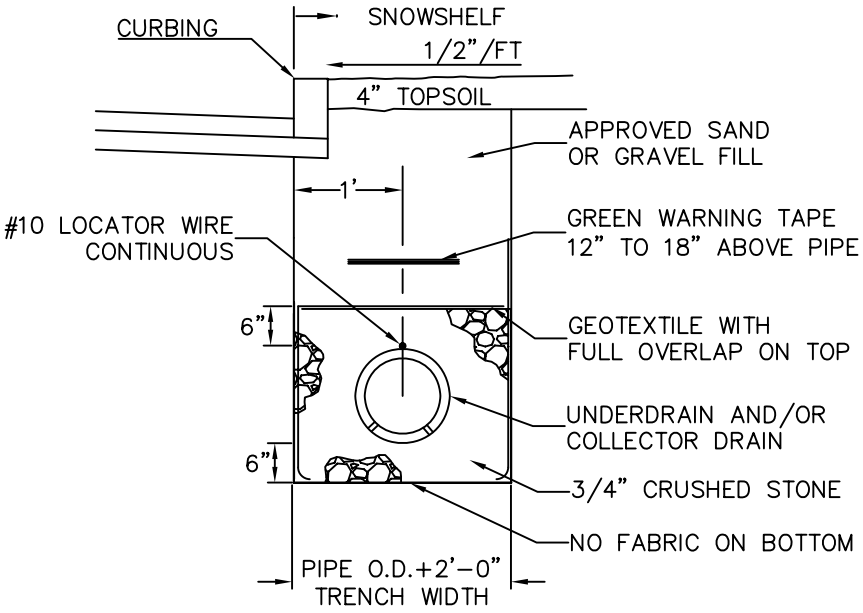

TRENCH DETAIL

NOTES:
1. PERFORATIONS TO BE PLACED DOWN.
2. HOLES ARE TO BE ½" DIAMETER OR ⅝"DIAMETER
3. PIPE SHALL BE MIN. 6" DIAMETER (SEE SPECS).
4. SLOTTED REINFORCED CONCRETE PIPE (SRCP) CAN BE USED AS A COMBINED STORM, UNDERDRAIN, AND COLLECTOR DRAIN SYSTEM.
5. ALL UNDERDRAINS TO BE OUTLETTED DIRECTLY INTO A CATCH BASIN. THE TOP OF THE UNDERDRAIN PIPE IS TO MATCH THE TOP OF THE OUTLET PIPE IN CATCH BASIN.
6. NO FLEXIBLE CORRUGATED PLASTIC PIPE IS TO BE USED UNLESS APPROVED BY THE ENGINEER.

TOWN OF WINDSOR Engineering Department	UNDERDRAIN/COLLECTOR DRAIN D-301
SCALE: HOR. NTS / VER. DATE: MAY 2010	

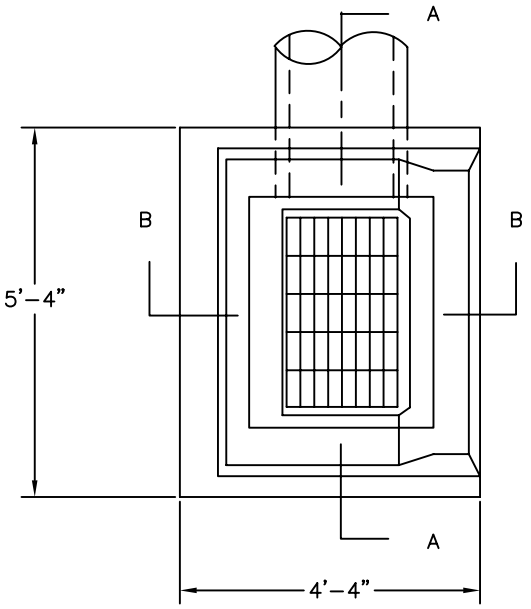

PLAN

NOTES:

1. ENDS OF PIPES SHALL EXTEND TO AND BE CUT FLUSH WITH INSIDE FACE OF CATCH BASIN. APPLY MORTAR TO CUT EDGE OF PIPE TO COVER REINFORCING.
2. RED BRICK IS NOT BE USED.
3. LADDER RUNGS SHALL BE INSTALLED IN ALL CATCH BASINS WHEN THE DEPTH OF THE STRUCTURE FROM THE TOPE OF FRAME TO THE LOWEST FLOW LINE EXCEEDS 4 FEET. RUNGS SHALL CONFORM TO FORM 816 SECTION M 08.02.5.
4. ANY OVER EXCAVATION SHALL BE REPLACED WITH PROCESSED AGGREGATE BASE, MEDIUM GRADATION, OR ¾" STONE.
5. ALL PRECAST CONCRETE PRODUCTS MUST HAVE THE CASTING DATE CLEARLY LABELED ON EACH PRODUCT. NO PRECAST CONCRETE PRODUCT SHALL BE DELIVERED TO THE SITE WITHIN THE 7 DAY PERIOD FOLLOWING THE CASTING DATE.
6. ALL WEAKENED OR KNOCKOUT AREAS THAT ARE NOT USED SHALL BE BRICKED AND MORTARED TO MAINTAIN DESIGN WALL THICKNESS.
7. THE JOINTS OF PRECAST CONCRETE CATCH BASINS SHALL BE WRAPPED WITH GEOTEXTILE COVERING AT LEAST 12 INCHES ON BOTH SIDES OF THE JOINT.
8. SUMP DEPTH SHALL INCREASE TO 4' WHEN CATCH BASIN OUTLETS TO A DRYWELL, AN INFILTRATOR SYSTEM, DETENTION BASIN, WETLANDS, WATERCOURSE, OR WHEN DIRECTED BY THE ENGINEER.
9. CATCH BASIN TOPS AND GRATES TO BE SET TO FINISHED GRADE. ASPHALT SHIMS TO BE PLACED BEFORE WINTER IS PAVING HAS NOT BEEN COMPLETED.
10. BACKFILL WITH SUITABLE MATERIAL APPROVED BY THE ENGINEER.
11. CATCH BASINS LOCATED WITHIN SUITABLE SOIL CONDITIONS AND A LOW WATER TABLE MAY INCLUDE INFILTRATION HOLES LOCATED ON THE SIDE AND BACK WALLS.

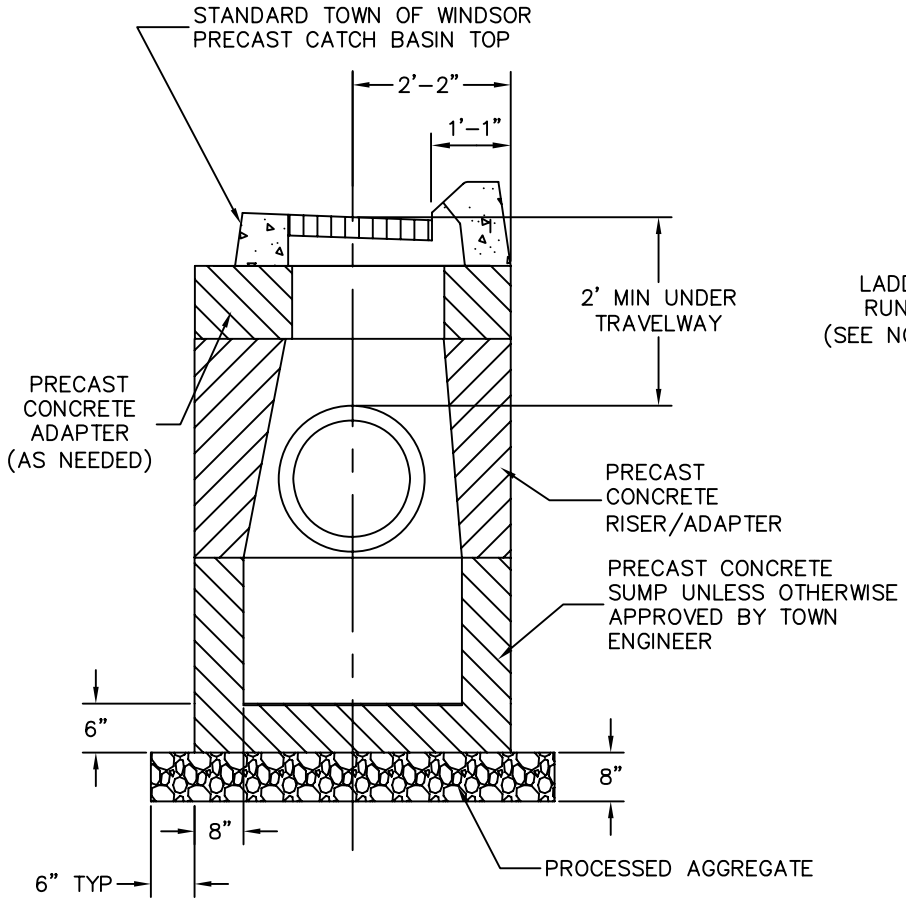

SECTION B-B

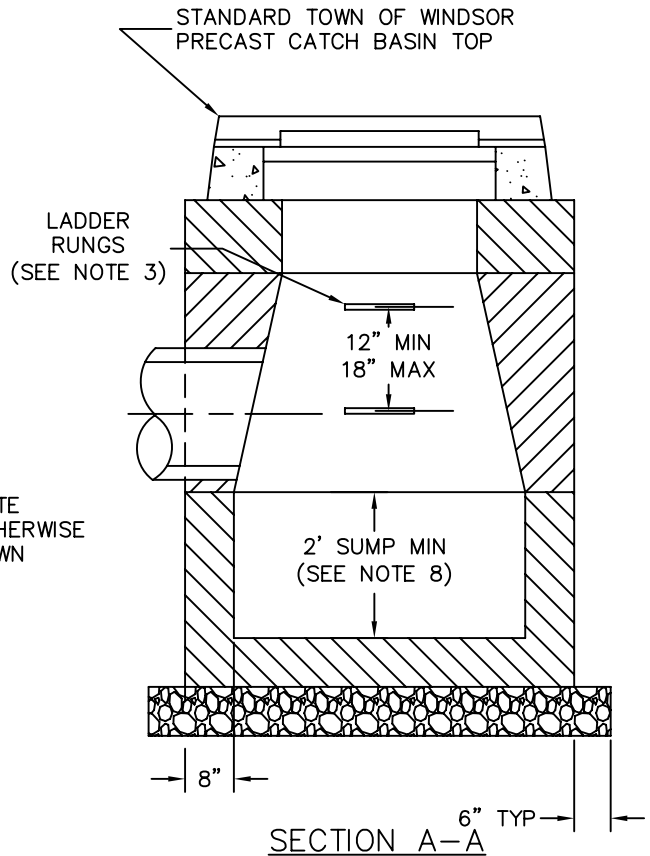

SECTION A-A

TOWN OF WINDSOR
Engineering Department

SCALE: HOR. NTS / VER. DATE: MAY 2010

CATCH BASIN TYPE "C"
PRECAST CONCRETE
D-302

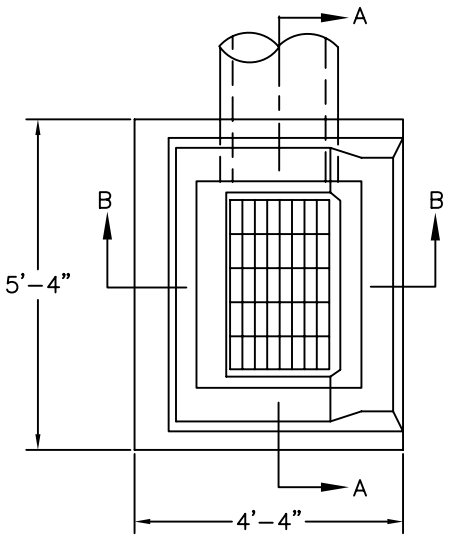

PLAN

NOTES:

1. END OF PIPE SHALL EXTEND TO AND BE CUT FLUSH WITH INSIDE FACE OF CATCH BASIN WALL.
2. RED BRICK IS NOT TO BE USED.
3. LADDER RUNGS SHALL BE INSTALLED IN ALL CATCH BASINS WHEN THE DEPTH OF THE STRUCTURE FROM THE TOP OF THE FRAME TO THE LOWEST FLOW LINE EXCEEDS 4 FEET. RUNGS SHALL CONFORM TO FORM 816 SECTION M08.02.5.
4. ANY OVER EXCAVATION SHALL BE REPLACED WITH PROCESSED AGGREGATE BASE, MEDIUM GRADATION, OR ¾" STONE.
5. WHERE CONCRETE MASONRY UNITS ARE USED, CORBELLING WILL BE ALLOWED AT A MAXIMUM OF ONE INCH PER COURSE ON THE LAST 3 COURSES. ON TYPE C BASINS, ONLY THE FRONT AND SIDE WALLS SHALL BE CORBELLED. THE TOP COURSE SHALL BE TURNED 90 DEGREES ON THE FRONT AND SIDE WALLS ONLY.
6. WHEN TOTAL EXTERIOR HEIGHT OF THE CATCH BASINS EXCEEDS 10 FEET, THE WALL THICKNESS SHALL BE INCREASED 12 INCHES.
7. THE EXTERIOR OF CONCRETE MASONRY CATCH BASINS SHALL BE WRAPPED WITH GEOTEXTILE.
8. SUMP DEPTH SHALL INCREASE TO 4' WHEN CATCH BASIN OUTLETS TO A DRYWELL, AN INFILTRATION SYSTEM, DETENTION BASIN, WETLANDS, WATERCOURSE, OR WHEN DIRECTED BY THE ENGINEER.
9. CATCH BASIN TOPS AND GRATES TO BE SET TO FINISHED GRADE, ASPHALT SHIMS TO BE PLACED BEFORE WINTER IF PAVING HAS NOT BEEN COMPLETED.
10. BACKFILL WITH SUITABLE MATERIAL APPROVED BY THE ENGINEER.
11. CATCH BASINS LOCATED WITHIN SUITABLE SOIL CONDITIONS AND A LOW WATER TABLE MAY INCLUDE INFILTRATION HOLES LOCATED ON THE SIDE AND BACK WALLS.

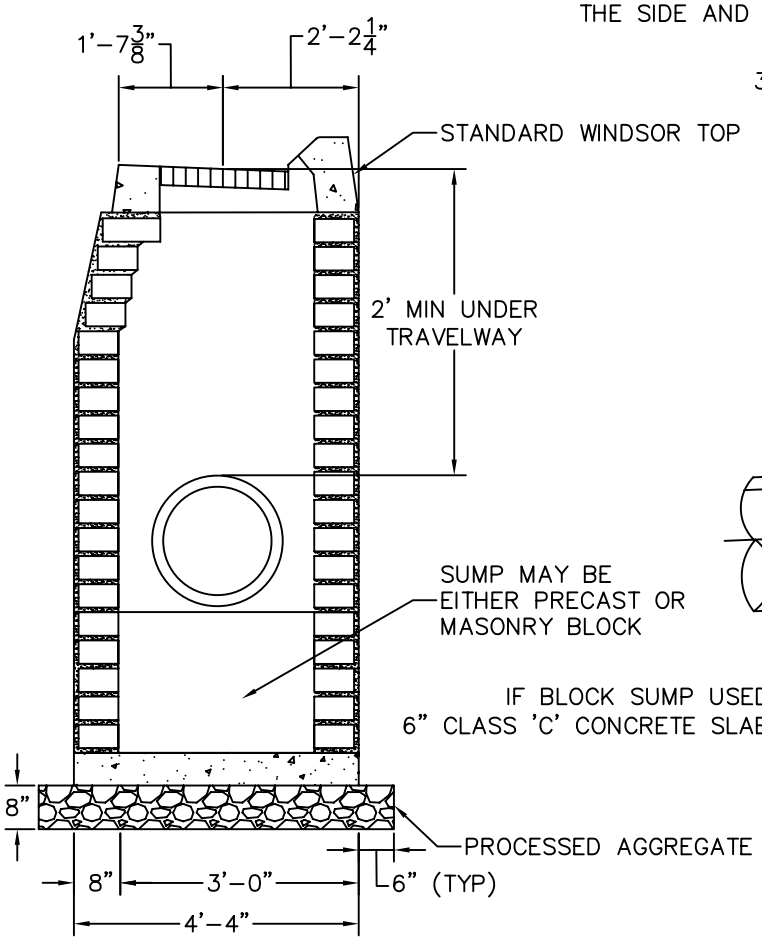

SECTION B-B

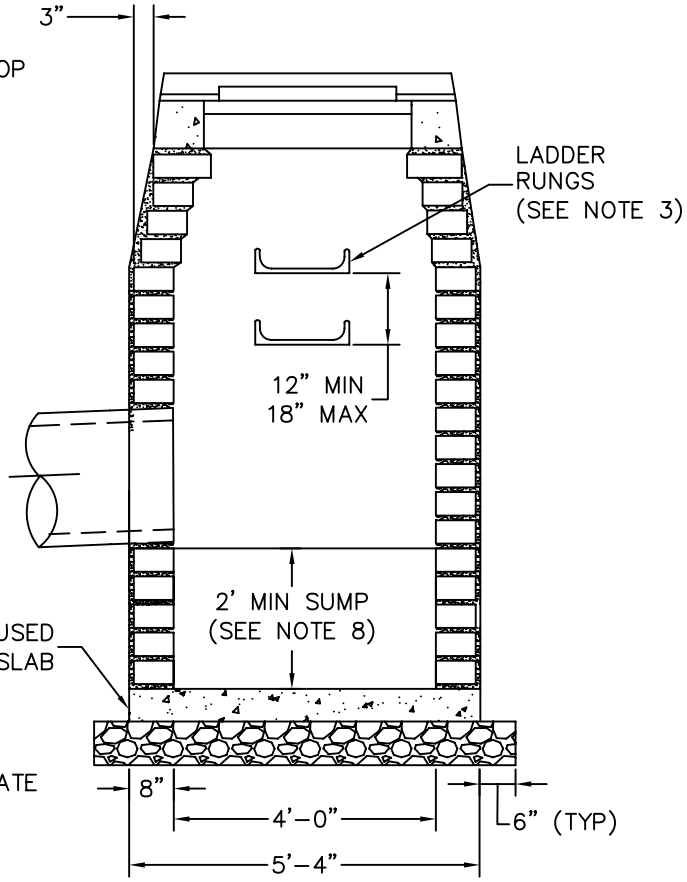

SECTION A-A

TOWN OF WINDSOR
Engineering Department

SCALE: HOR. NTS / VER.

DATE: MAY 2010

CATCH BASIN TYPE "C"
CONCRETE MASONRY UNITS
D-303

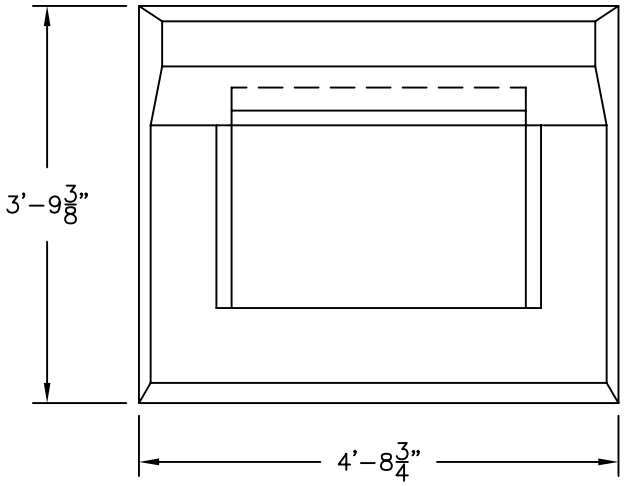

TOP

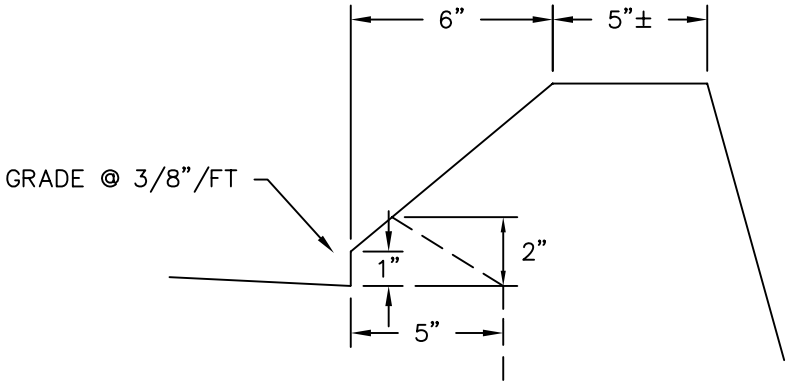

CURB INLET DETAIL

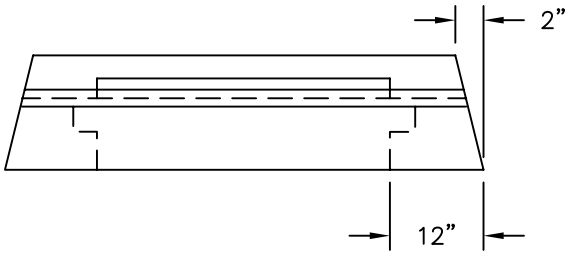

FRONT

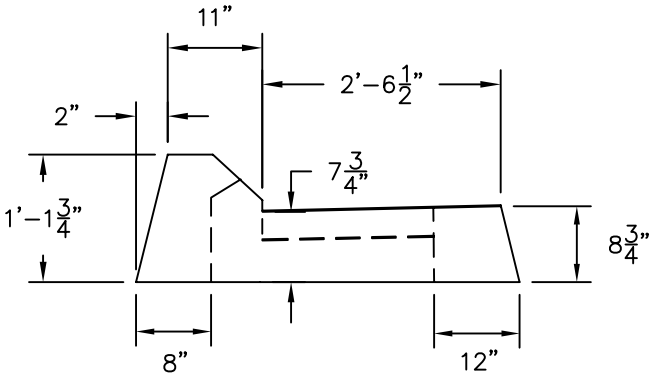

SIDE

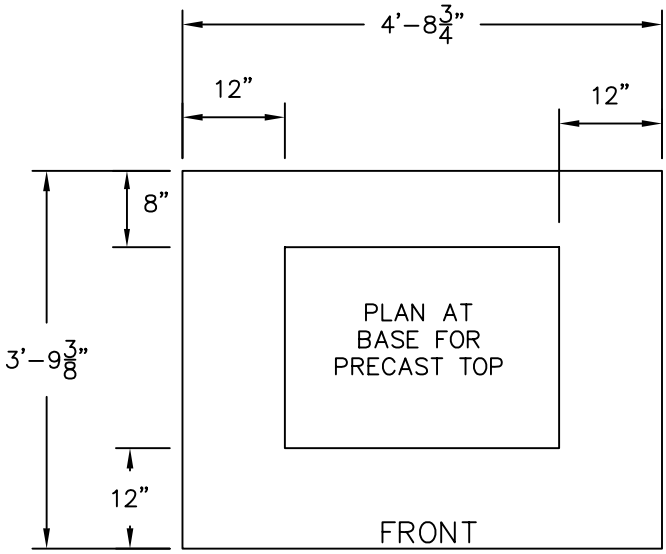

NOTES:

1. ALL DIMENSIONS SHOWN ARE FOR GENERAL INFORMATION ONLY. CONTRACTOR TO SUBMIT MANUFACTURERS' SHOP DRAWINGS OF SPECIFIC PRODUCT FOR APPROVAL BY THE ENGINEER.
2. A 3'-0¾" X 1'-7⅜" GALVANIZED, BICYCLE SAFE GRATE SHALL BE USED.

TOWN OF WINDSOR
Engineering Department

SCALE: HOR. NTS / VER. DATE: MAY 2010

CATCH BASIN TOP
TYPE "C" PRECAST CONCRETE
D-304

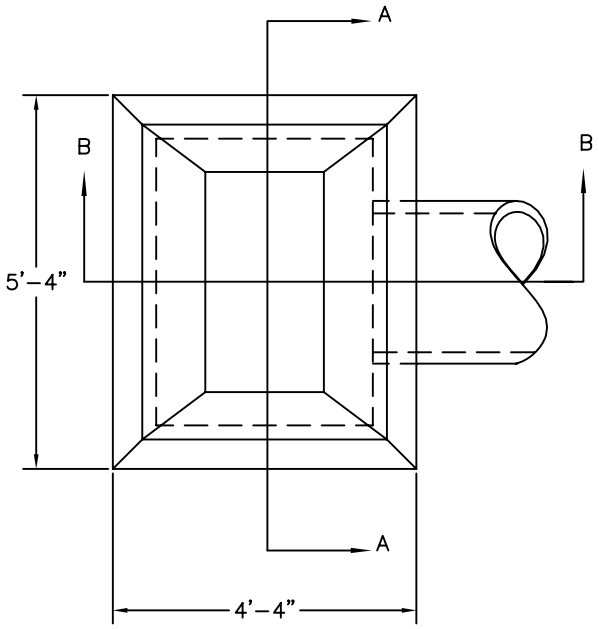

PLAN

NOTES:

1. ENDS OF PIPES SHALL EXTEND TO AND BE CUT FLUSH WITH INSIDE FACE OF CATCH BASIN. APPLY MORTAR TO CUT EDGE OF PIPE TO COVER REINFORCING.
2. RED BRICK IS NOT TO BE USED.
3. LADDER RUNGS SHALL BE INSTALLED IN ALL CATCH BASINS WHEN THE DEPTH OF THE STRUCTURE FROM THE TOP OF FRAME TO THE LOWEST FLOW LINE EXCEEDS 4 FEET. RUNGS SHALL CONFORM TO FOR, 816 SECTION M08.02.5.
4. ANY OVER EXCAVATION SHALL BE REPLACED WITH PROCESSED AGGREGATE BASE, MEDIUM GRADATION, OR ¾" STONE.
5. ALL PRECAST CONCRETE PRODUCTS MUST HAVE THE CASTING DATE CLEARLY LABELED ON EACH PRODUCT. NO PRECAST CONCRETE PRODUCT SHALL BE DELIVERED TO THE SITE WITHIN THE 7 DAY PERIOD FOLLOWING THE CASTING DATE.
6. ALL WEAKENED OR KNOCKOUT AREAS THAT ARE NOT USED SHALL BE BRICKED AND MORTARED TO MAINTAIN DESIGN WALL THICKNESS.
7. THE JOINTS OF PRECAST CONCRETE CATCH BASINS SHALL BE WRAPPED WITH GEOTEXTILE COVERING AT LEAST 12 INCHES ON BOTH SIDES OF THE JOINT.
8. SUMP DEPTH SHALL INCREASE TO 4' WHEN CATCH BASIN OUTLETS TO A DRYWELL. AN INFILTRATOR SYSTEM, DETENTION BASIN, WETLANDS, WATERCOURSE, OR WHEN DIRECTED BY THE ENGINEER.
9. CATCH BASIN TOPS AND GRATES TO BE SET TO FINISHED GRADE. ASPHALT SHIMS TO BE PLACED BEFORE WINTER IF PAVING HAS NOT BEEN COMPLETED.
10. BACKFILL WITH SUITABLE MATERIAL APPROVED BY THE ENGINEER.
11. CATCH BASINS LOCATED WITHIN SUITABLE SOIL CONDITIONS AND A LOW WATER TABLE MAY INCLUDE INFILTRATION HOLES LOCATED ON THE SIDE AND BACK WALLS.

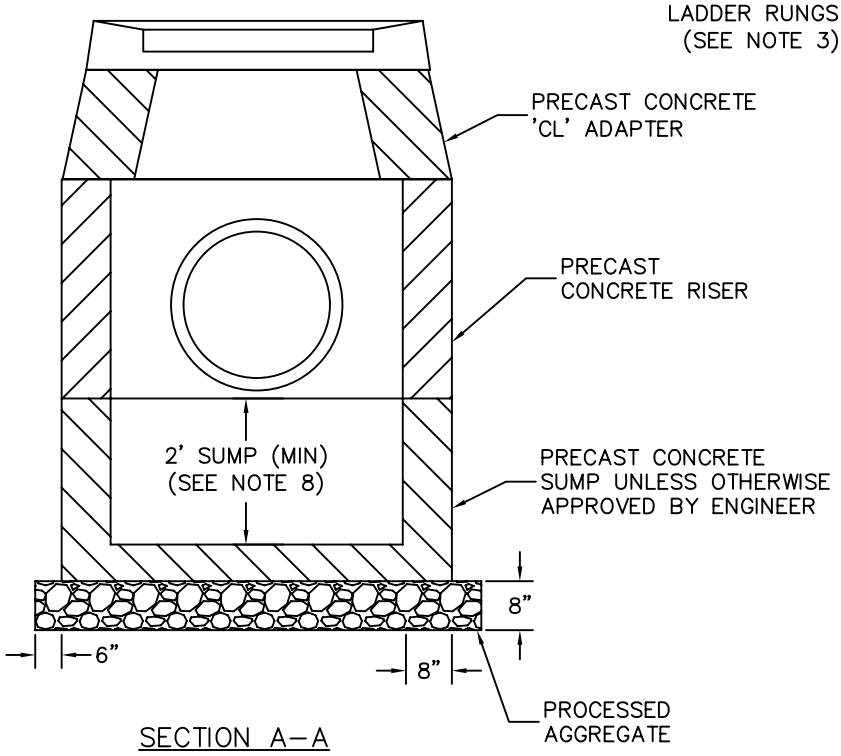

SECTION A–A

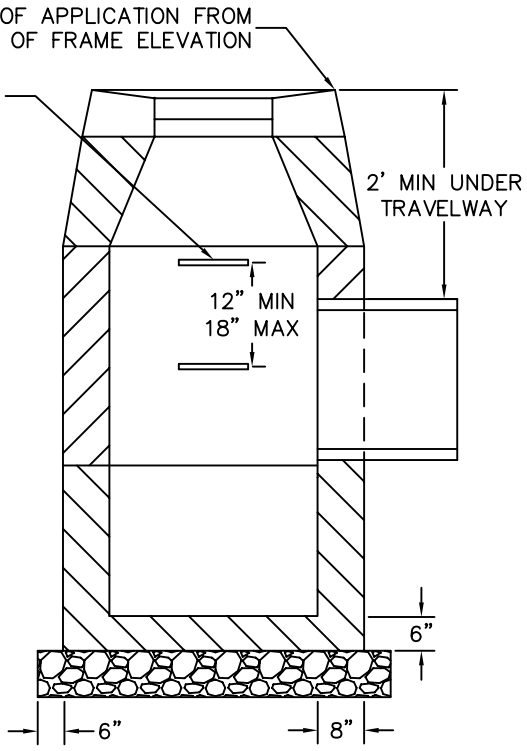

SECTION B–B

TOWN OF WINDSOR
Engineering Department

SCALE: HOR. NTS VER. DATE: MAY 2010

CATCH BASIN TYPE "CL"
PRECAST CONCRETE
D–305

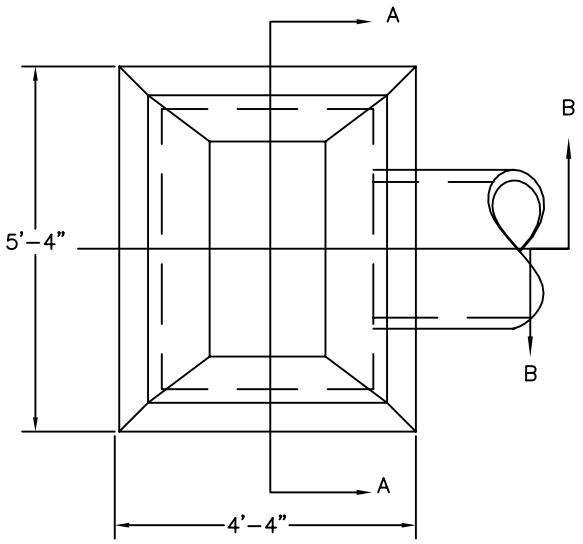

PLAN

NOTES:

1. ENDS OF PIPES SHALL EXTEND TO AND BE CUT FLUSH WITH INSIDE FACE OF CATCH BASIN.
2. RED BRICK IS NOT TO BE USED.
3. LADDER RUNGS SHALL BE INSTALLED IN ALL CATCH BASINS WHEN THE DEPTH OF THE STRUCTURE FROM THE TOP OF FRAME TO THE LOWEST FLOW LINE EXCEEDS 4 FEET. RUNGS SHALL CONFORM TO FOR, 816 SECTION M08.02.5.
4. ANY OVER EXCAVATION SHALL BE REPLACED WITH PROCESSED AGGREGATE BASE, MEDIUM GRADATION, OR ¾" STONE.
5. WHERE CONCRETE MASONRY UNITS ARE USED, CORBELLING WILL BE ALLOWED AT A MAXIMUM OF ONE INCH PER COURSE ON THE LAST 3 COURSES. ON TYPE "CL" BASINS, ALL 4 SIDES SHALL BE CORBELLED AND THE TOP COURSE SHALL BE TURNED 90 DEGREES.
6. WHEN TOTAL EXTERIOR DEPTH OF THE CATCH BASIN EXCEEDS 10 FEET, THE WALL THICKNESS SHALL BE INCREASED TO 12 INCHES.
7. THE EXTERIOR OF THE CONCRETE MASONRY CATCH BASINS SHALL BE WRAPPED WITH GEOTEXTILE.
8. SUMP DEPTH SHALL INCREASE TO 4' WHEN CATCH BASIN OUTLETS TO A DRYWELL. AN INFILTRATOR SYSTEM, DETENTION BASIN, WETLANDS, WATERCOURSE, OR WHEN DIRECTED BY THE ENGINEER.
9. CATCH BASIN TOPS AND GRATES TO BE SET TO FINISHED GRADE. ASPHALT SHIMS TO BE PLACED BEFORE WINTER IF PAVING HAS NOT BEEN COMPLETED.
10. BACKFILL WITH SUITABLE MATERIAL APPROVED BY THE ENGINEER.
11. CATCH BASINS LOCATED WITHIN SUITABLE SOIL CONDITIONS AND A LOW WATER TABLE MAY INCLUDE INFILTRATION HOLES LOCATED ON THE SIDE AND BACK WALLS.

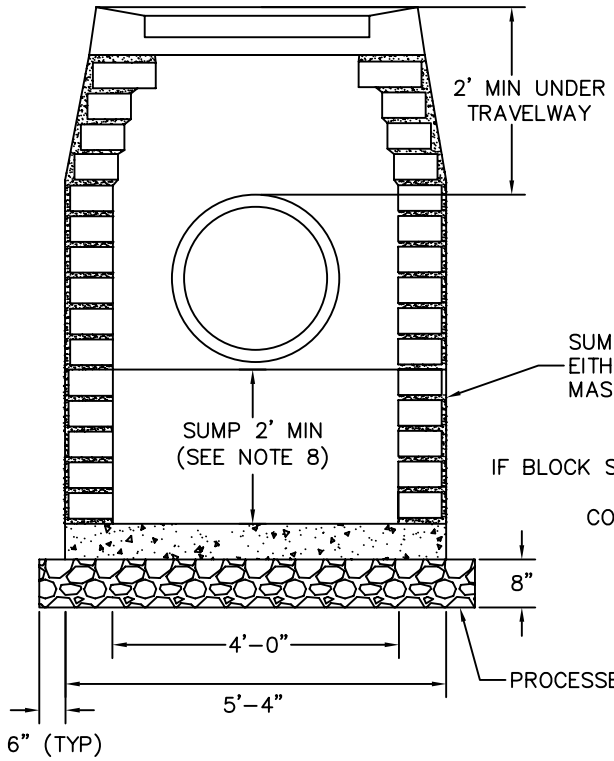

SECTION A–A

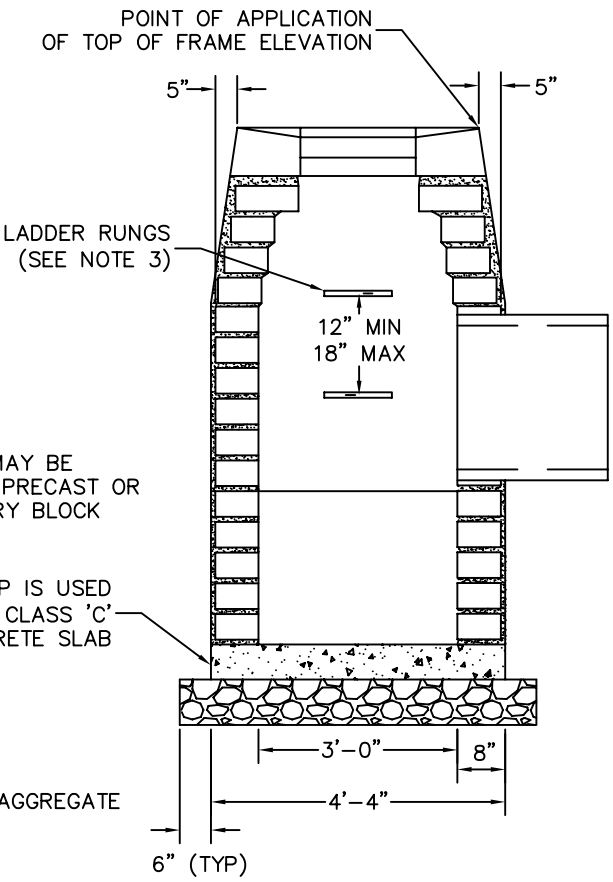

SECTION B–B

TOWN OF WINDSOR
Engineering Department

SCALE: HOR. NTS VER. DATE: MAY 2010

CATCH BASIN TYPE "CL"
CONCRETE MASONRY UNITS
D–306

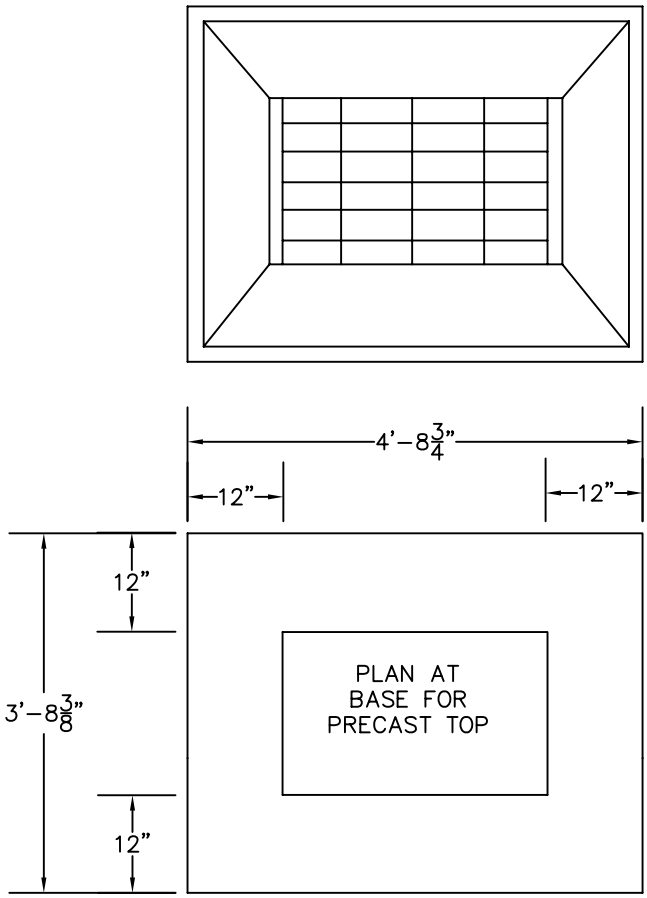

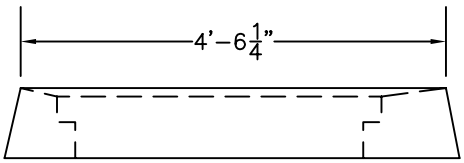

FRONT

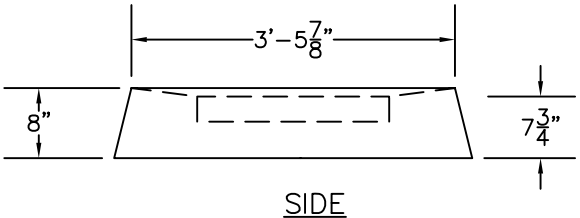

SIDE

NOTES:

1. ALL DIMENSIONS SHOWN ARE FOR GENERAL INFORMATION ONLY. CONTRACTOR TO SUBMIT MANUFACTURERS' SHOP DRAWINGS OF SPECIFIC PRODUCT FOR APPROVAL BY THE ENGINEER.
2. A 3'-0 3/4" X 1'-7 3/8" GALVANIZED, BICYCLE SAFE GRATE SHALL BE USED.

TOWN OF WINDSOR
Engineering Department

SCALE: HOR. NTS / VER. DATE: MAY 2010

CATCH BASIN TOP
TYPE "CL" PRECAST CONCRETE
D-307

NOTES:

1. ENDS OF PIPES SHALL EXTEND TO AND BE CUT FLUSH WITH INSIDE FACE OF MANHOLE. APPLY MORTAR TO CUT EDGE OF PIPE TO COVER REINFORCING.
2. RED BRICK IS NOT TO BE USED.
3. LADDER RUNGS SHALL BE INSTALLED IN ALL MANHOLES WHEN THE DEPTH OF THE STRUCTURE FROM THE TOP OF FRAME TO THE LOWEST FLOW LINE EXCEEDS 4 FEET. RUNGS SHALL CONFORM TO FORM 816 SECTION M08.02.5.
4. ANY OVER EXCAVATION SHALL BE REPLACED WITH PROCESSED AGGREGATE BASE, MEDIUM GRADATION, OR ¾" STONE.
5. ALL PRECAST CONCRETE PRODUCTS MUST HAVE THE CASTING DATE CLEARLY LABELED ON EACH PRODUCT. NO PRECAST CONCRETE PRODUCT SHALL BE DELIVERED TO THE SITE WITHIN THE 7 DAY PERIOD FOLLOWING THE CASTING DATE.
6. ALL WEAKENED OR KNOCKOUT AREAS THAT ARE NOT USED SHALL BE BRICKED AND MORTARED TO MAINTAIN DESIGN WALL THICKNESS.
7. THE JOINTS OF PRECAST CONCRETE MANHOLES SHALL BE WRAPPED WITH GEOTEXTILE COVERING AT LEAST 12 INCHES ON BOTH SIDES OF THE JOINT.
8. MANHOLE FRAME AND COVER TO BE SET TO FINISHED GRADE. ASPHALT SHIMS TO BE PLACED BEFORE WINTER IF PAVING HAS NOT BEEN COMPLETED.
9. BACKFILL WITH SUITABLE MATERIAL APPROVED BY THE ENGINEER.

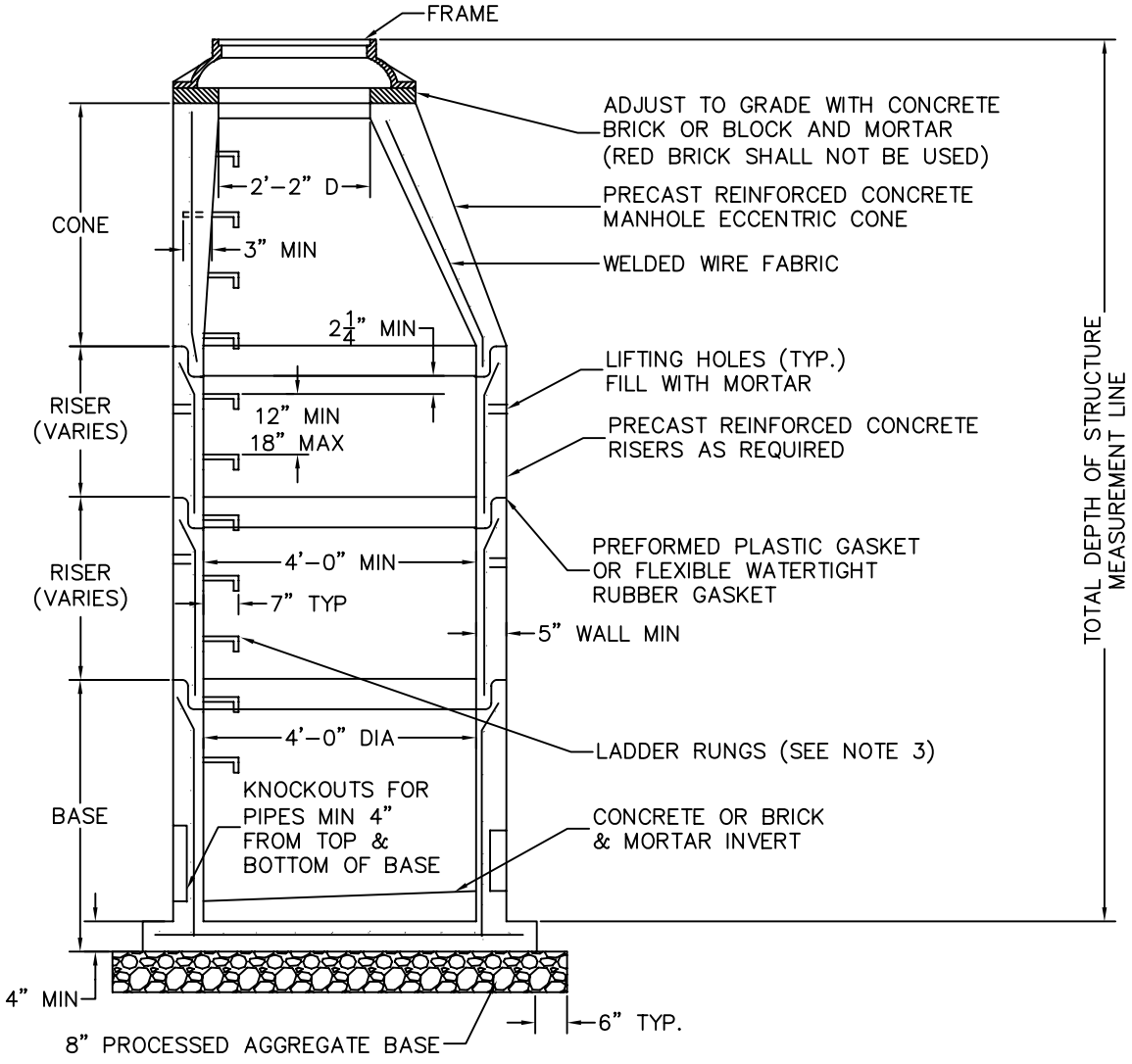

TOWN OF WINDSOR
Engineering Department

SCALE: HOR. NTS / VER. DATE: MAY 2010

DRAINAGE MANHOLE
PRECAST CONCRETE
D-308

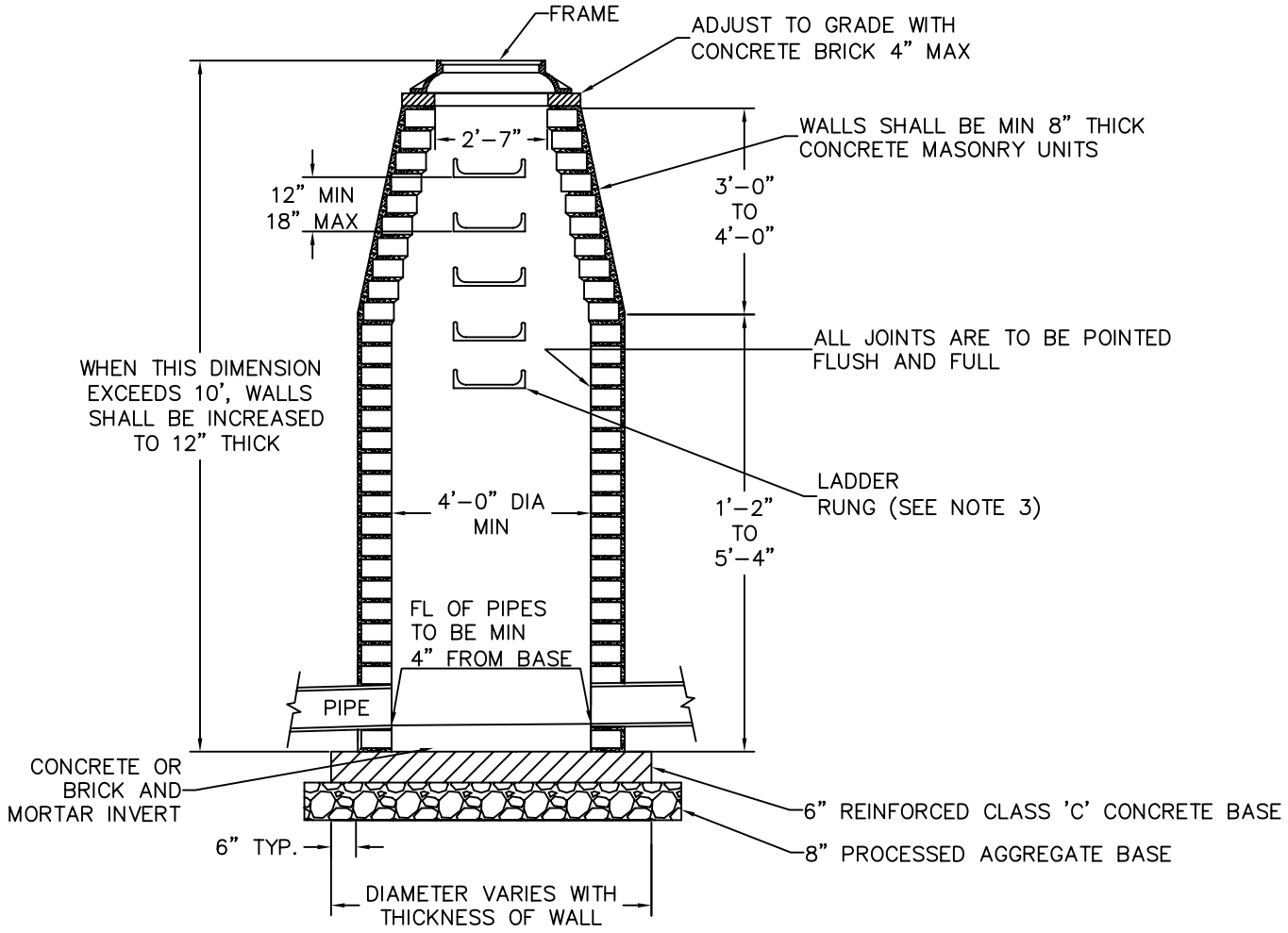

NOTES:

1. CONCRETE MASONRY UNITS TO BE LAID IN CEMENT SAND MORTAR 1:2 MIX. JOINTS NOT BE OVER ½" THICK ON INSIDE FACE OF WALL.
2. RED BRICK IS NOT TO BE USED.
3. LADDER RUNGS SHALL BE INSTALLED IN ALL MANHOLES WHEN THE DEPTH OF THE STRUCTURE FROM THE TOP OF FRAME TO THE LOWEST FLOW LINE EXCEEDS 4 FEET. RUNGS SHALL CONFORM TO FORM 816 SECTION M08.02.5.
4. FRAME AND COVER TO BE SET TO FINISHED GRADE. ASPHALT SHIMS TO BE PLACED BEFORE WINTER IN PAVING HAS NOT BEEN COMPLETED.
5. ALL EXTERIOR MANHOLE WALLS SHALL BE WRAPPED WITH GEOTEXTILE WITH 6" OVERLAP ON ALL SEAMS.
6. ANY OVER EXCAVATION SHALL BE REPLACED WITH PROCESSED AGGREGATE BASE, MEDIUM GRADATION, OR ¾" STONE.
7. BACKFILL WITH SUITABLE MATERIAL APPROVED BY THE ENGINEER.

TOWN OF WINDSOR
Engineering Department

SCALE: HOR. NTS VER. DATE: MAY 2010

DRAINAGE MANHOLE
CONCRETE MASONRY UNITS
D-309

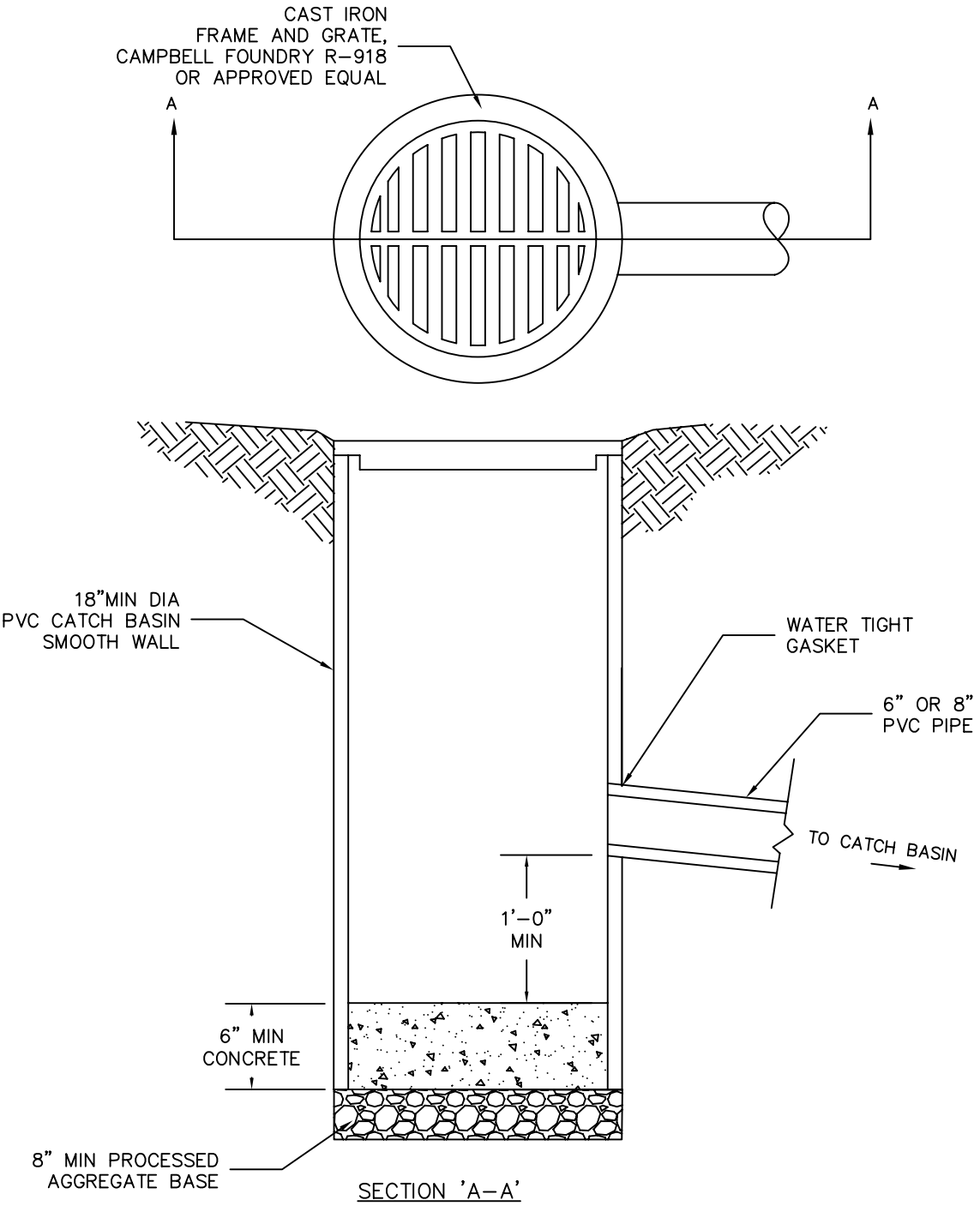

NOTES:
1. MINIMUM DEPTH OF YARD DRAIN 42".
2. THE INSTALLATION OF THIS YARD DRAIN IS INTENDED FOR USE IN SMALL LAWN AREAS.

TOWN OF WINDSOR
Engineering Department

SCALE: HOR. NTS / VER. DATE: MAY 2010

YARD DRAIN
D-310

PIPE SIZE	A	B	C	D
UNDER 18"	10'	7'	2'	3'
18"–24"	16'	10'	3'	4'
30"–36"	22'	16'	4'	5'

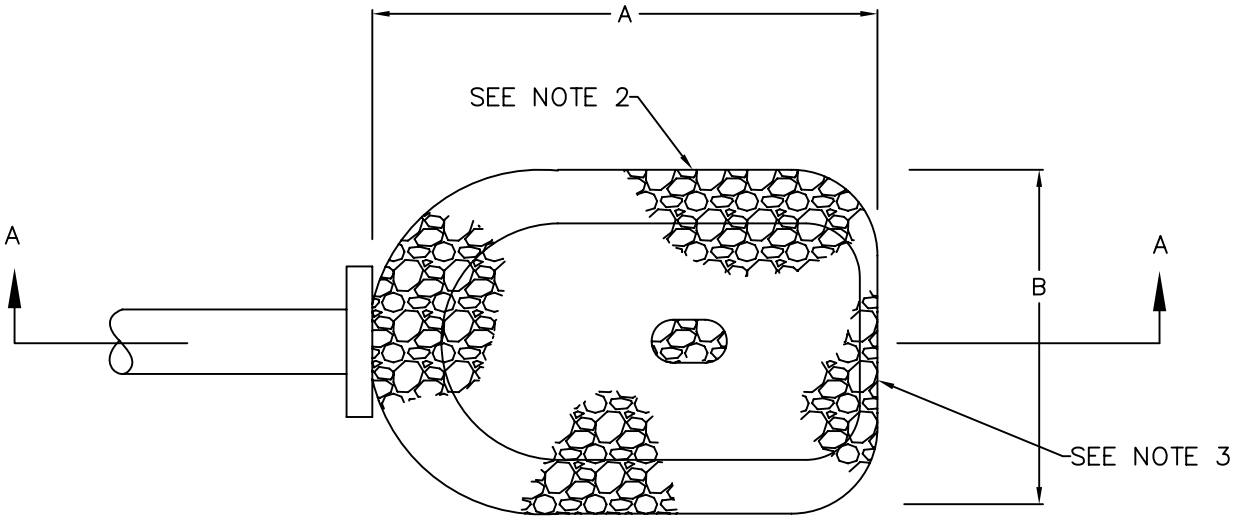

PLAN

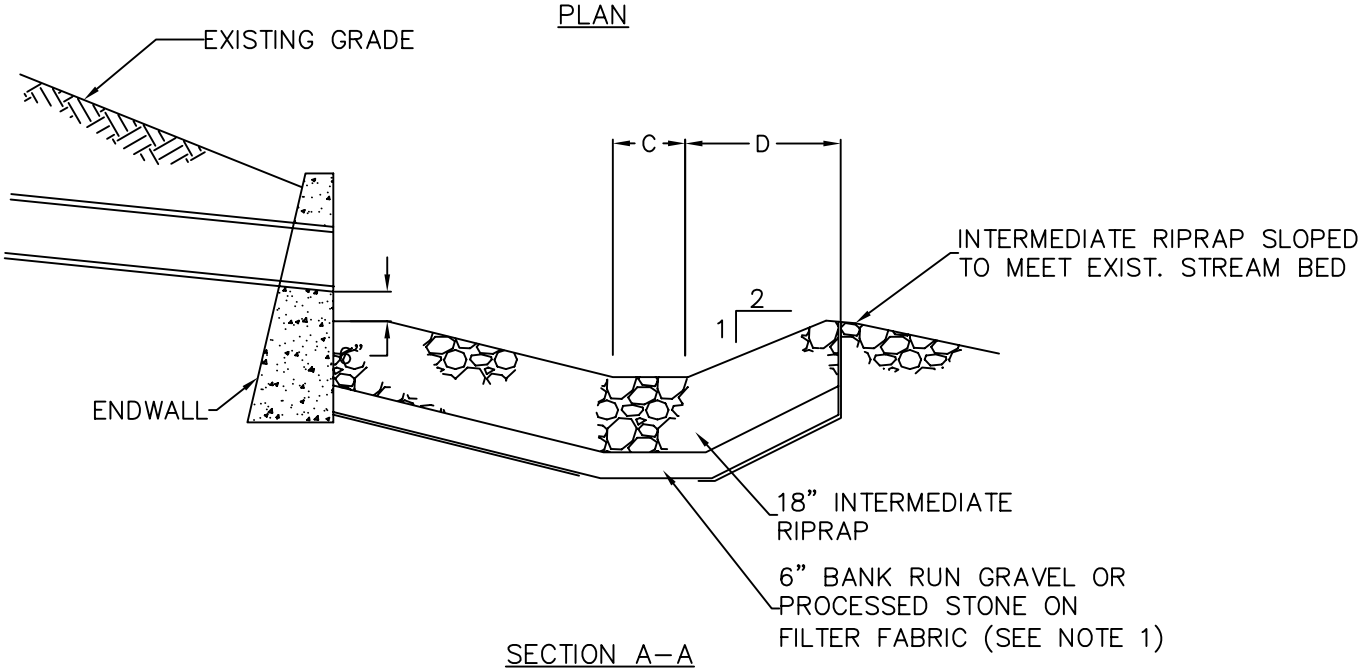

SECTION A–A

NOTES:
1. FILTER FABRIC SHALL BE NONWOVEN CLASS 2, WITH PERMITTIVITY OF 0.5 TO 0.1 SEC AND AOS OF 0.43mm TO 0.22mm AND SHALL MEET AASHTO M288–96.
2. SIDE ELEVATIONS TO BE AT OR ABOVE PIPE FLOW LINE.
3. DOWNSTREAM ELEVATION TO BE 1"–2' LOWER THAN UPSTREAM ELEVATION.

TOWN OF WINDSOR
Engineering Department

SCALE: HOR. NTS / VER. DATE: MAY 2010

PLUNGE POOL
D–311

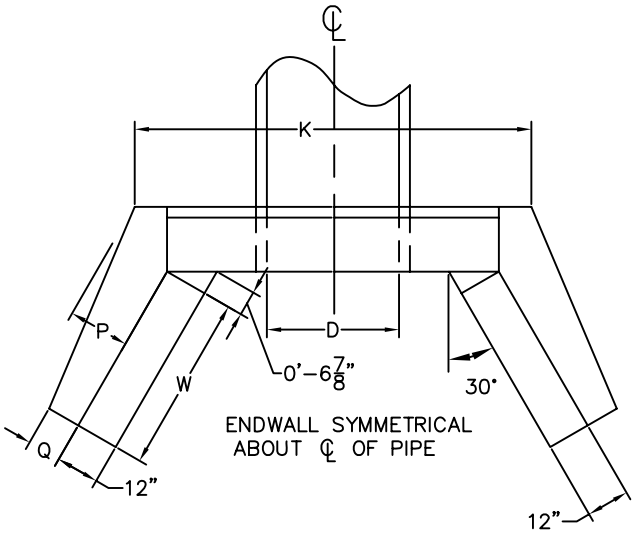

NOTES:
1. ALL EDGES OF EXPOSED SURFACE TO BE CHAMFERED ONE INCH.
2. WHEN ONE ENDWALL IS TO BE USED FOR TWO PIPES, THE DIMENSIONS OF THE ENDWALL SHALL CONFORM TO THOSE REQUIRED FOR THE LARGER PIPE, EXCEPT THE DIMENSION "L" SHALL BE INCREASED BY THE OUTSIDE DIA. OF THE SMALLER PIPE PLUS TWO FEET.
3. IF CONSTRUCTED ON FILL OR IN AN AREA OF OVER EXCAVATION 8" OF PROCESSED AGGREGATE BASE SHALL BE USED.

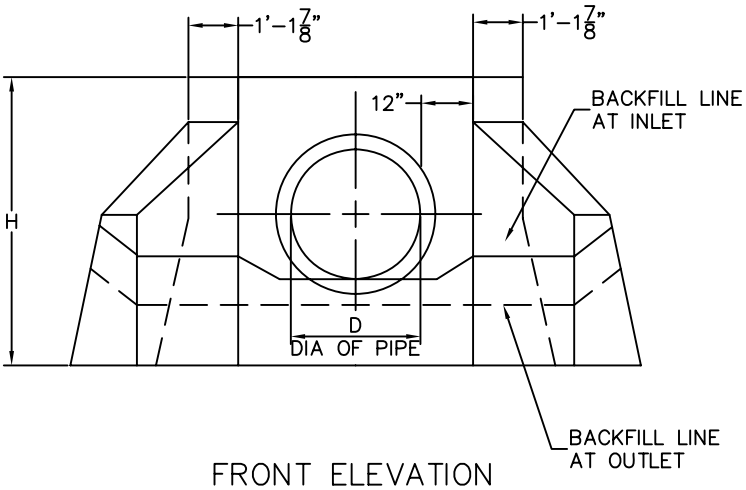

FRONT ELEVATION

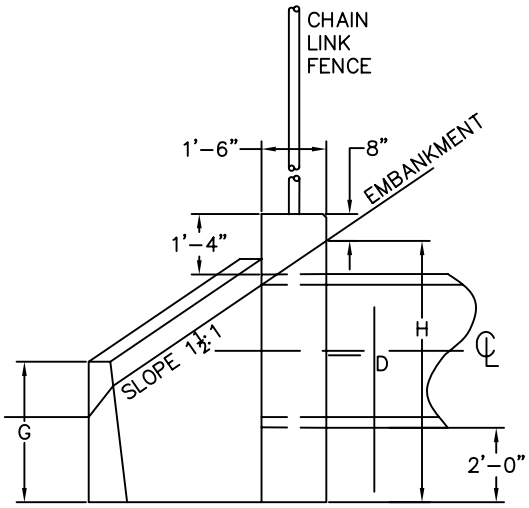

SIDE ELEVATION

G	H	K	P	Q	W
FT & IN	FT & IN	FT & IN	FT & IN	FT & IN	FT & IN
3'–3"	6'–8"	9'–1½"	1'–4⅞"	0'–9¾"	4'–1⅜"
3'–3"	7'–2"	9'–10½"	1'–6⅜"	0'–11¾"	4'–11¾"
3'–9"	8'–2"	10'–10"	1'–9⅜"	0'–11¾"	5'–10"
3'–9"	8'–8"	11'–7½"	1'–10⅞"	0'–11¼"	6'–8½"
3'–9"	9'–2"	12'–4½"	2'–0⅜"	0'–11¼"	7'–7"
3'–9"	10'–2"	13'–10¾"	2'–3⅜"	0'–11¼"	9'–3¾"
3'–9"	10'–8"	14'–8"	2'–3⅞"	0'–11¼"	10'–3¾"

TOWN OF WINDSOR
Engineering Department

SCALE: HOR. NTS / VER. DATE: MAY 2010

WING TYPE ENDWALL
D–312

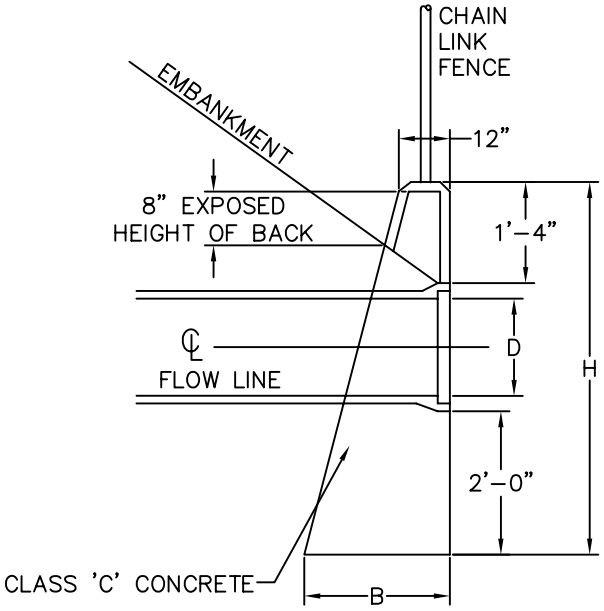

WALL AT FOOT OF SLOPE

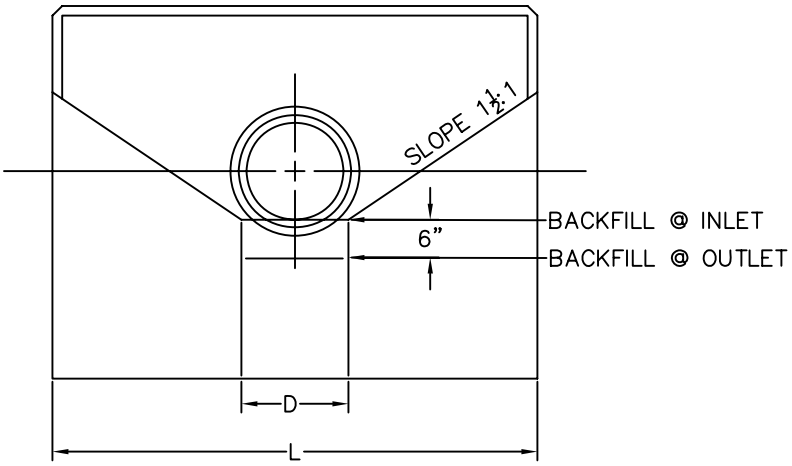

FRONT ELEVATION

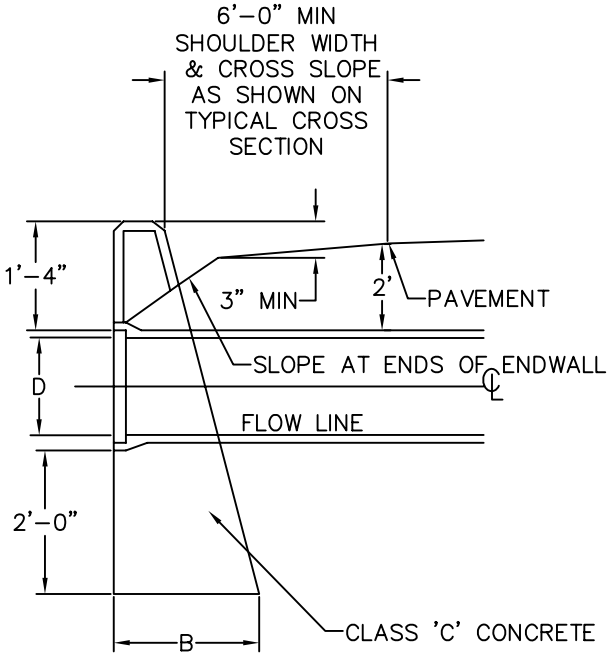

WALL AT SHOULDER

NOTES:

1. ALL EDGES OF EXPOSED SURFACE TO BE CHAMFERED ONE INCH.
2. WHEN ONE ENDWALL IS TO BE USED FOR TWO PIPES, THE DIMENSIONS OF THAT ENDWALL SHALL CONFORM TO THOSE REQUIRED FOR THE LARGER PIPE, EXCEPT THE DIMENSION "L" SHALL BE INCREASED BY THE OUTSIDE DIA. OF THE SMALLER PIPE PLUS TWO FEET.
3. IF CONSTRUCTED ON FILL OR IN AN AREA OF OVER EXCAVATION, 8" OF PROCESSED AGGREGATE BASE SHALL BE USED.

D= INSIDE DIA. OF PIPE
H= TOTAL HEIGHT OF WALL
L= LENGTH OF WALL=3S+D
B= BASE

ENDWALL DIMENSIONS

D	H	L	BATTER PER FT	B
IN	FT & IN	FT & IN	–	FT & IN
12"	4'-6"	4'-6"	2½"	1'-11¼"
15"	4'-9¼"	5'-6¾"	2½"	2'-0"
18"	5'-0½"	6'-7½"	2½"	2'-0½"
24"	5'-7"	8'-9"	2½"	2'-1⅛"
30"	6'-1½"	10'-10½"	2½"	2'-3"
36"	6'-8"	13'-0"	3"	2'-7½"
42"	7'-2½"	15'-1½"	3"	2'-9"
48"	7'-9"	17'-3"	3"	2'-10½"

TOWN OF WINDSOR
Engineering Department

SCALE: HOR. NTS / VER. DATE: MAY 2010

ENDWALL
D-313

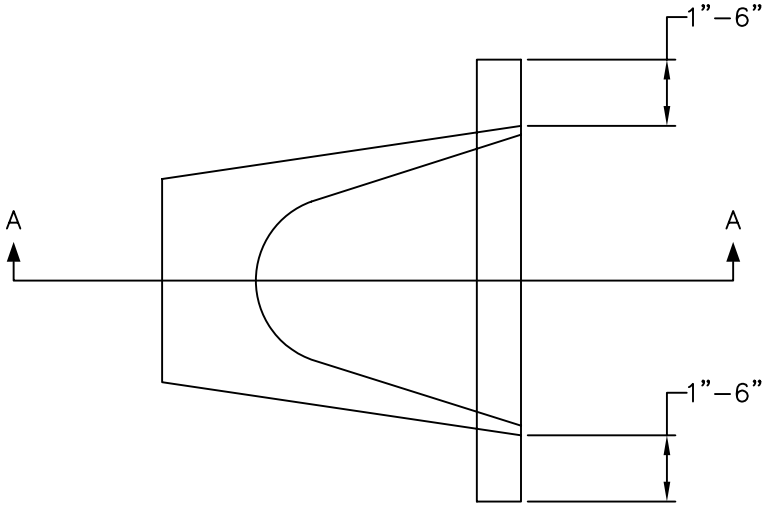

PLAN VIEW

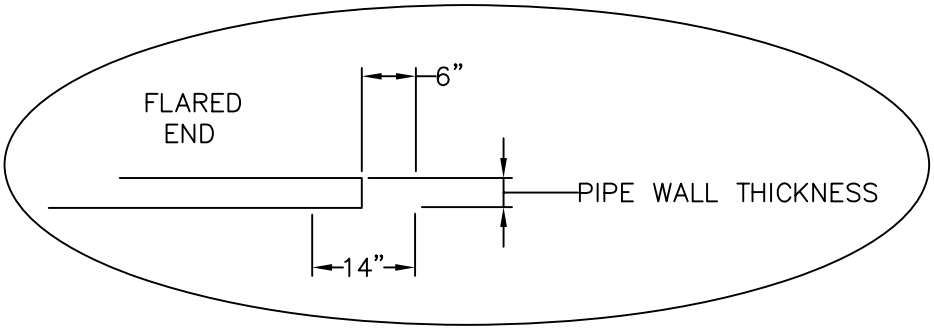

DETAIL 'A'

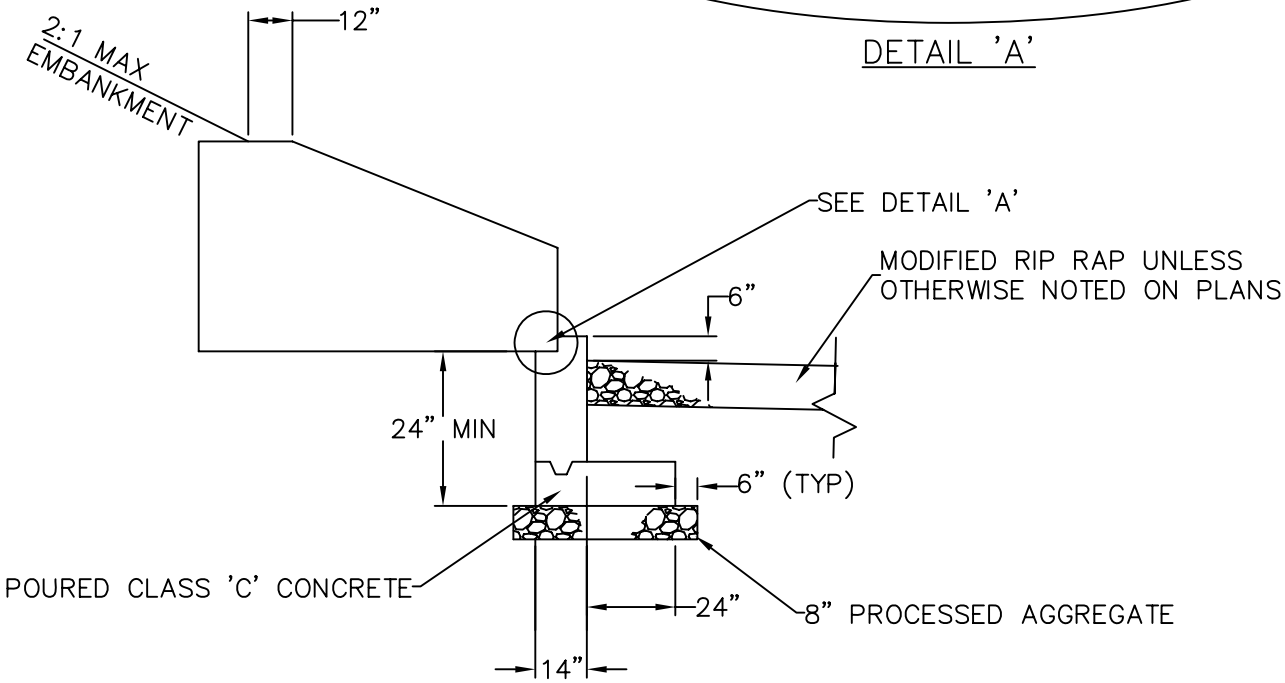

SECTION A–A

TOWN OF WINDSOR **Engineering Department**	SUPPORT WALL FOR FLARED END PIPE D–314
SCALE: HOR. NTS / VER. — DATE: MAY 2010	

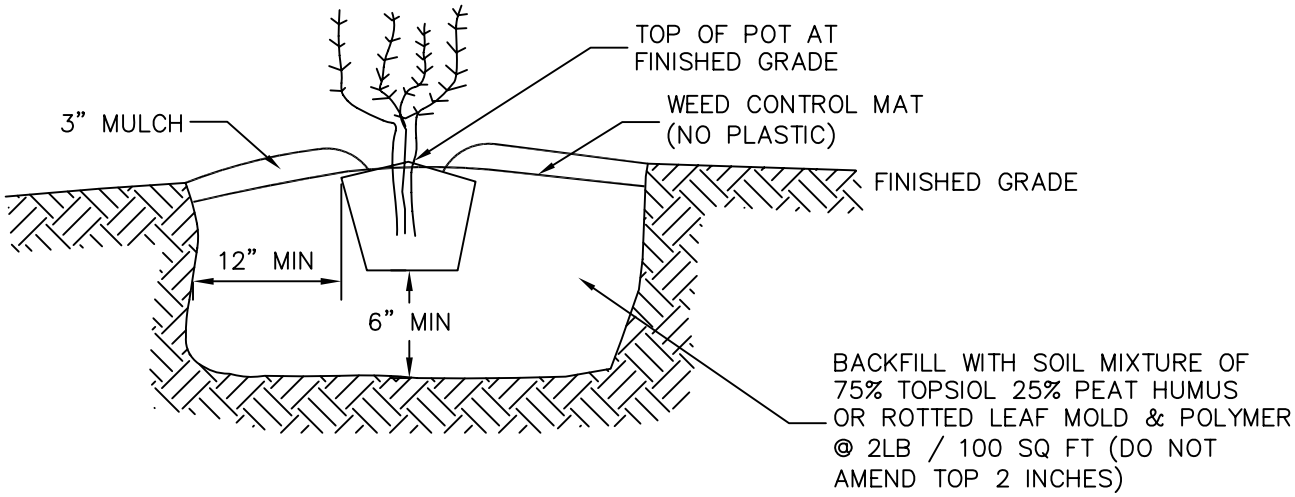

SHRUB PLANTING

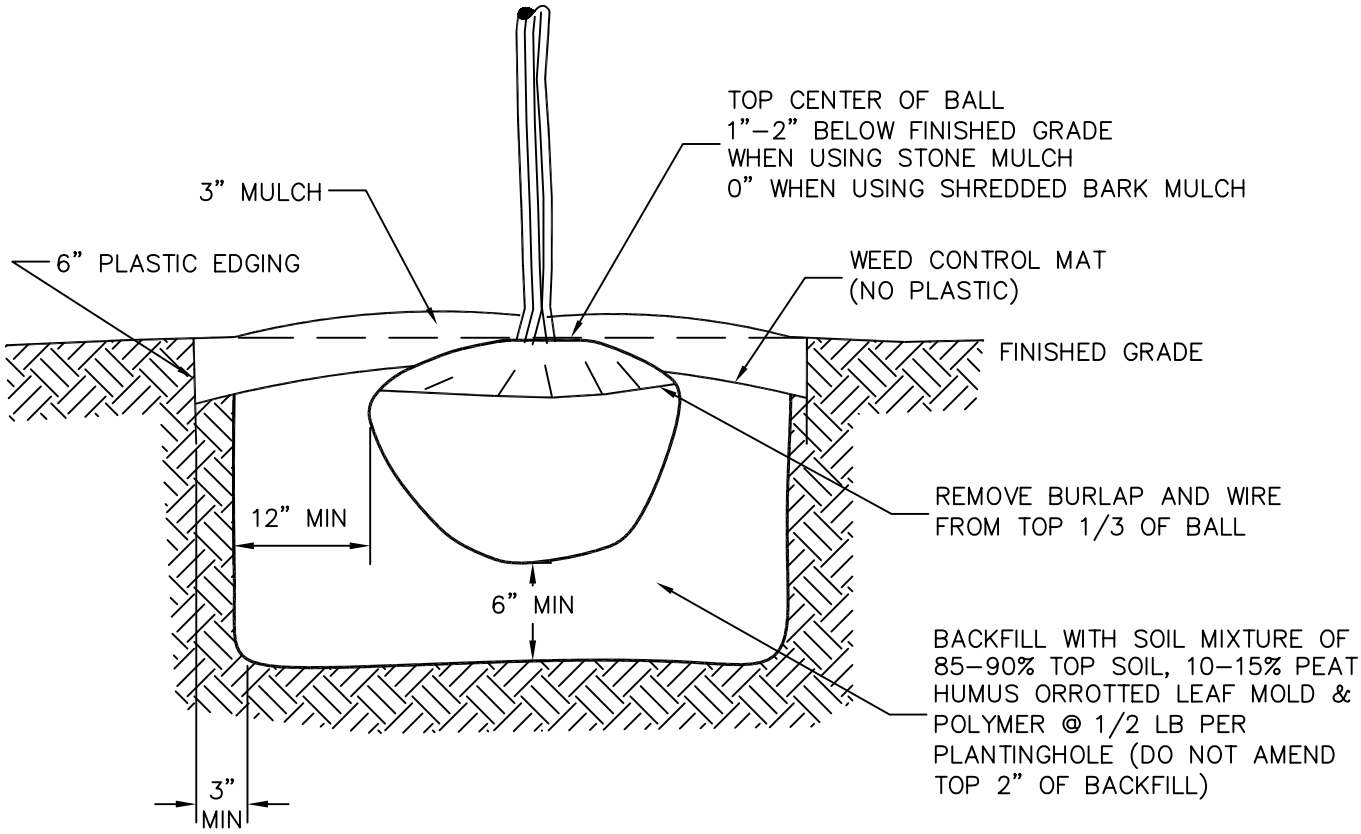

NOTE: STAKE TREES WHEN NEEDED AND/OR AS DIRECTED BY ENGINEER

TREE PLANTING

TOWN OF WINDSOR Engineering Department	TREE AND SHRUB PLANTING D–400
SCALE: HOR. NTS / VER. DATE: MAY 2010	

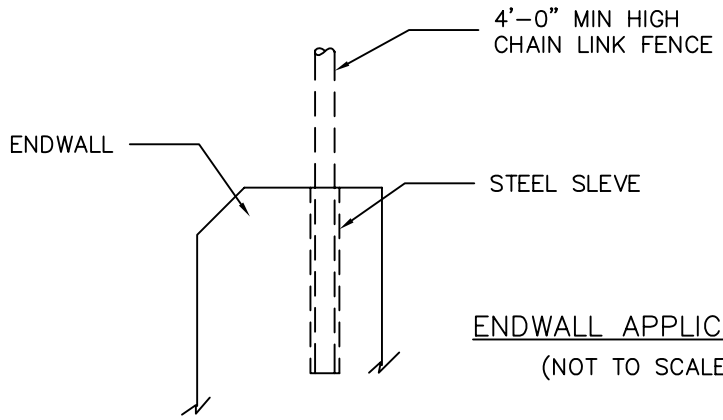

ENDWALL APPLICATION
(NOT TO SCALE)

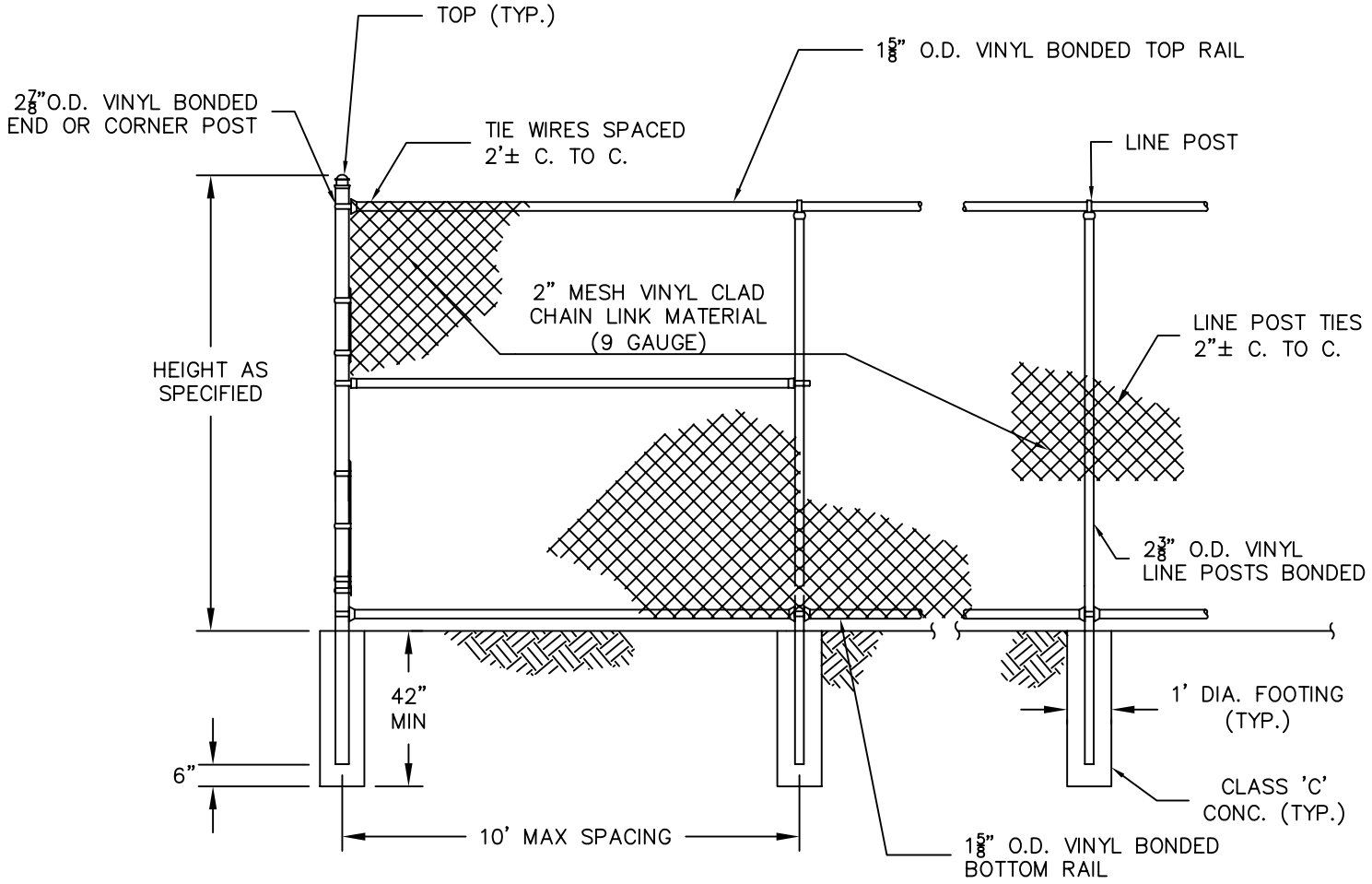

TOWN OF WINDSOR
Engineering Department

SCALE: HOR. NTS / VER. DATE: MAY 2010

CHAIN LINK FENCING
D-401

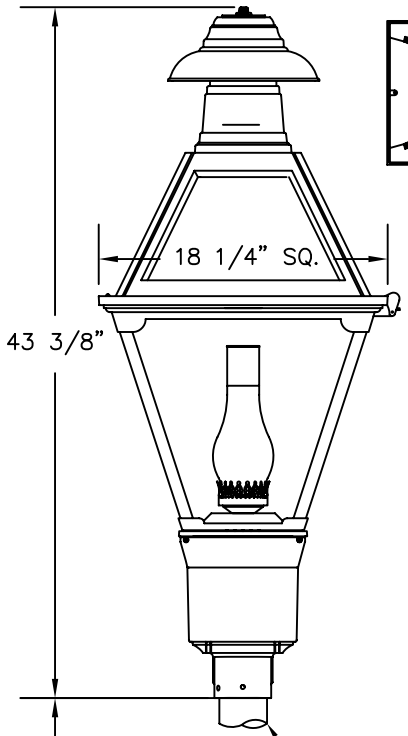

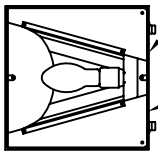

BOTTOM VIEW OF TYPE III CUT-OFF REFLECTOR SYSTEM

HINGE SIDE OF ROOF

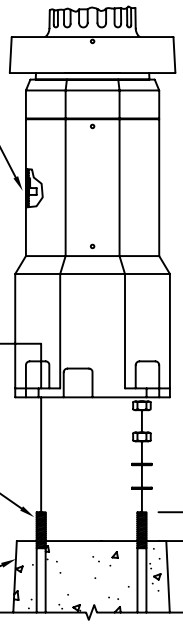

3" O.D. TOP 4" O.D. BOTTOM x 0.125 WALL TAPERED ALUMINUM TUBING

FURNISH 12'-0 1/4" POLE

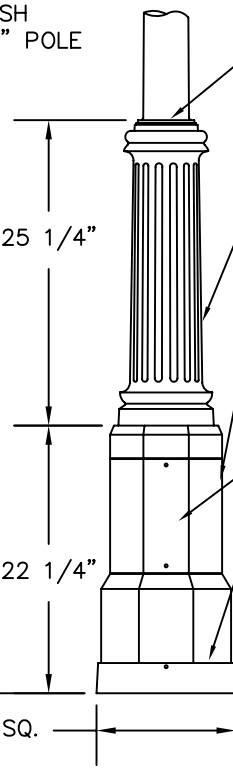

CONTINUOUS WELD

CAST ALUMINUM UPPER BASE WITH 14 FLUTES

CAST ALUMINUM OCTAGONAL BASE WELDED TO UPPER BASE

CAST ALUMINUM REMOVABLE ACCESS DOOR

CAST ALUMINUM SQUARE SLIP-OVER BASE COVER WITH 2 SET SCREWS

2-1/2"

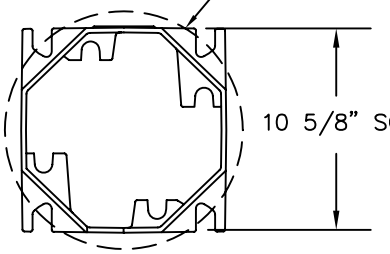

NOTES:

1. POLE AND LANTERN TO BE FACTORY PAINTED SATIN BLACK UNLESS OTHERWISE SPECIFIED.
2. LANTERN = HANOVER LANTERN, INC. DWG. NO. L49561 OR APPROVED EQUAL.
3. POLE = HANOVER LANTERN, INC. DWG. NO. 316-7 THRU 18 OR APPROVED EQUAL.

TOWN OF WINDSOR
Engineering Department

SCALE: HOR. NTS / VER. DATE: MAY 2010

DECORATIVE LIGHT POLE, LANTERN, AND BASE

D-402

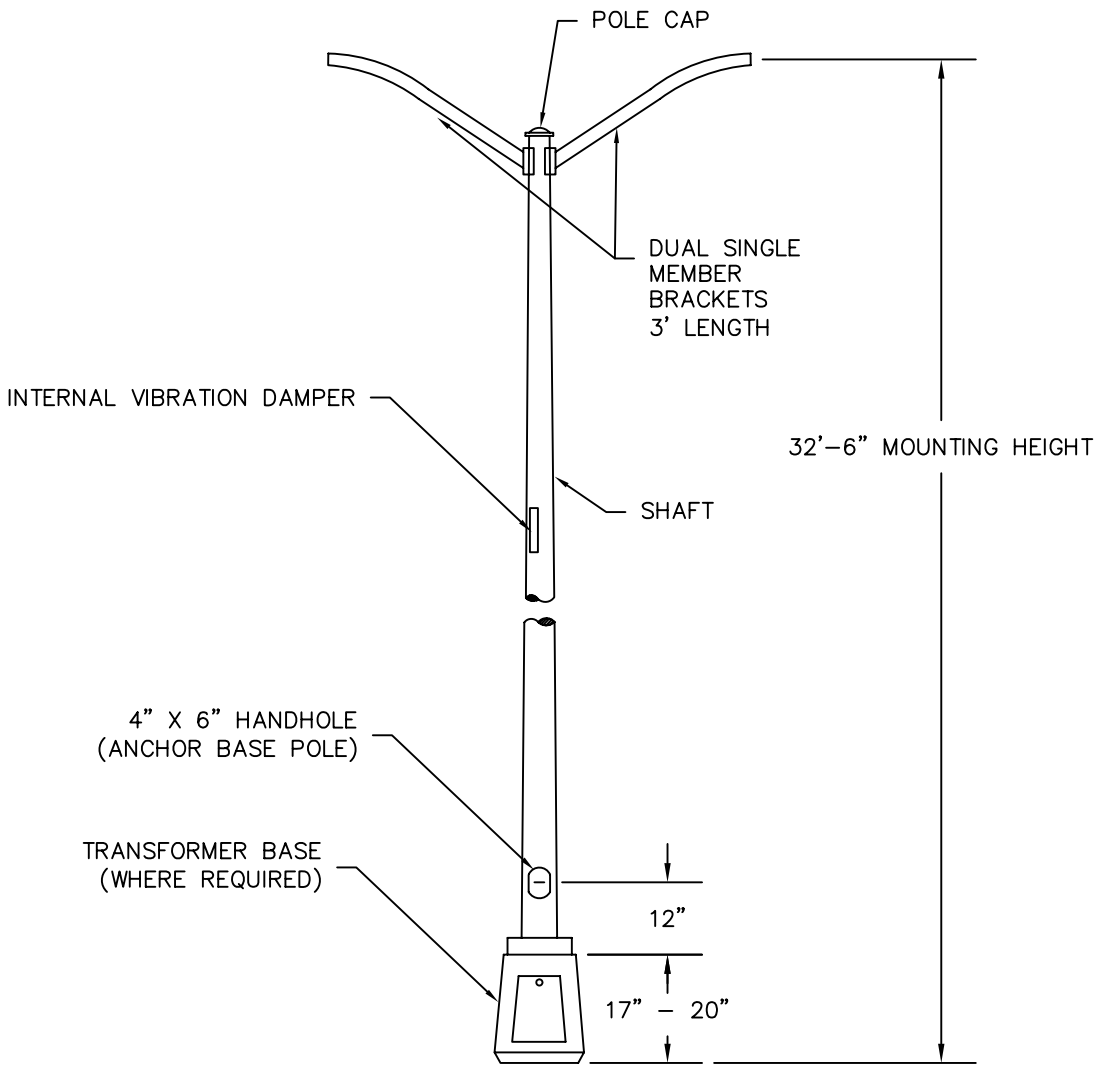

ALUMINUM LIGHT STANDARD

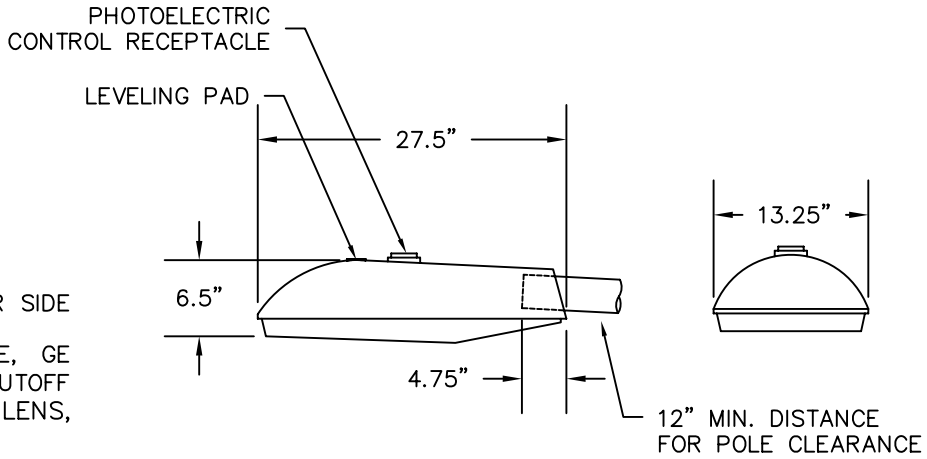

LUMINAIRE DETAIL

NOTES:
1. TRANSFORMER BASES DOOR TO BE ON FAR SIDE OF TRAFFIC FLOW.
2. LUMINAIRE SHALL BE COBRA–HEAD STYLE, GE M–250A2 POWR/DOOR® LUMINAIRE WITH CUTOFF OPTICS (OR APPROVED EQUAL), FLAT LENS, 150W HPS LAMP, TYPE III CUTOFF.

TOWN OF WINDSOR
Engineering Department

SCALE: HOR. NTS / VER. DATE: MAY 2010

COMMERCIAL LIGHT POLE AND LUMINAIRE
D–402B

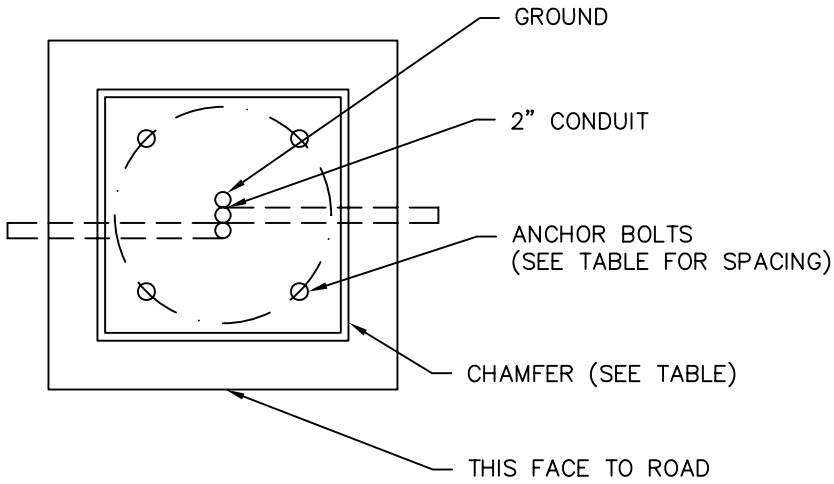

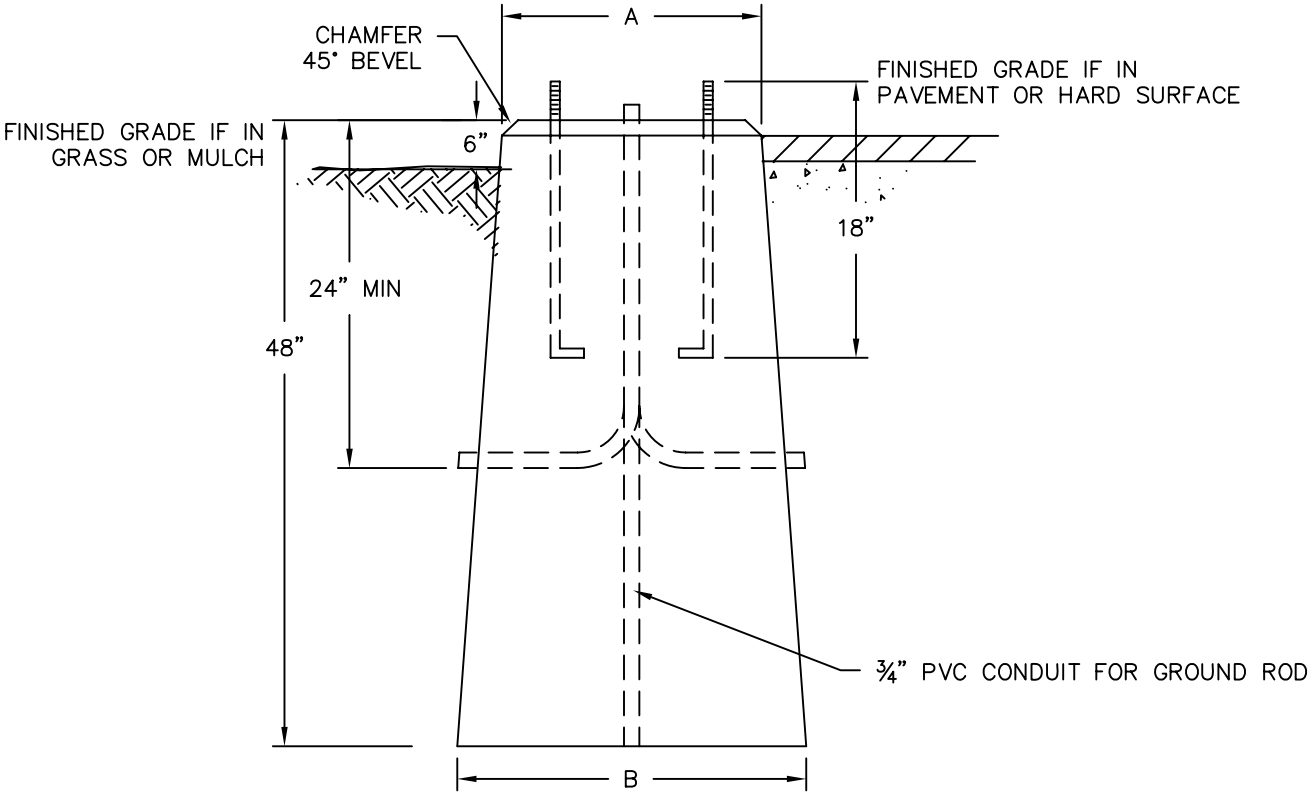

NOTES:
1. CONCRETE SHALL BE MINIMUM 4,000 PSI, 28 DAY
2. CONDUIT SHALL BE SCHEDULE 40 PVC.

A	B	CHAMFER	AREA TO BE USED	BOLT CIRCLE DIAMETER
15"SQ	20"SQ MIN.	¾"	RESIDENTIAL/DECORATIVE	12⅜"
20"SQ	24"SQ MIN.	1"	COMMERCIAL/INDUSTRIAL	15"

TOWN OF WINDSOR
Engineering Department

SCALE: HOR. NTS / VER. DATE: MAY 2010

CONCRETE LIGHT
STANDARD BASE
D-403

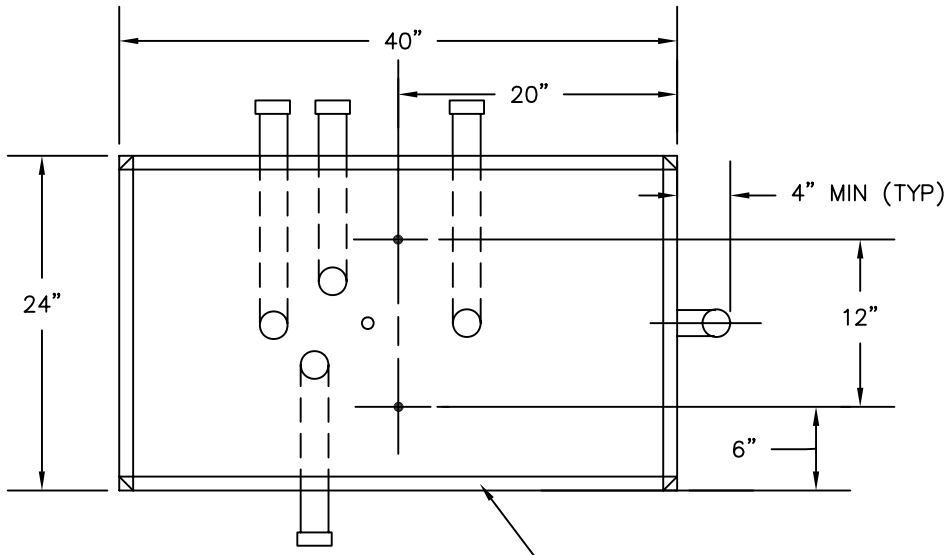

PLAN VIEW

1"x1" CHAMFER (TYP.)
**ALL EXPOSED EDGES

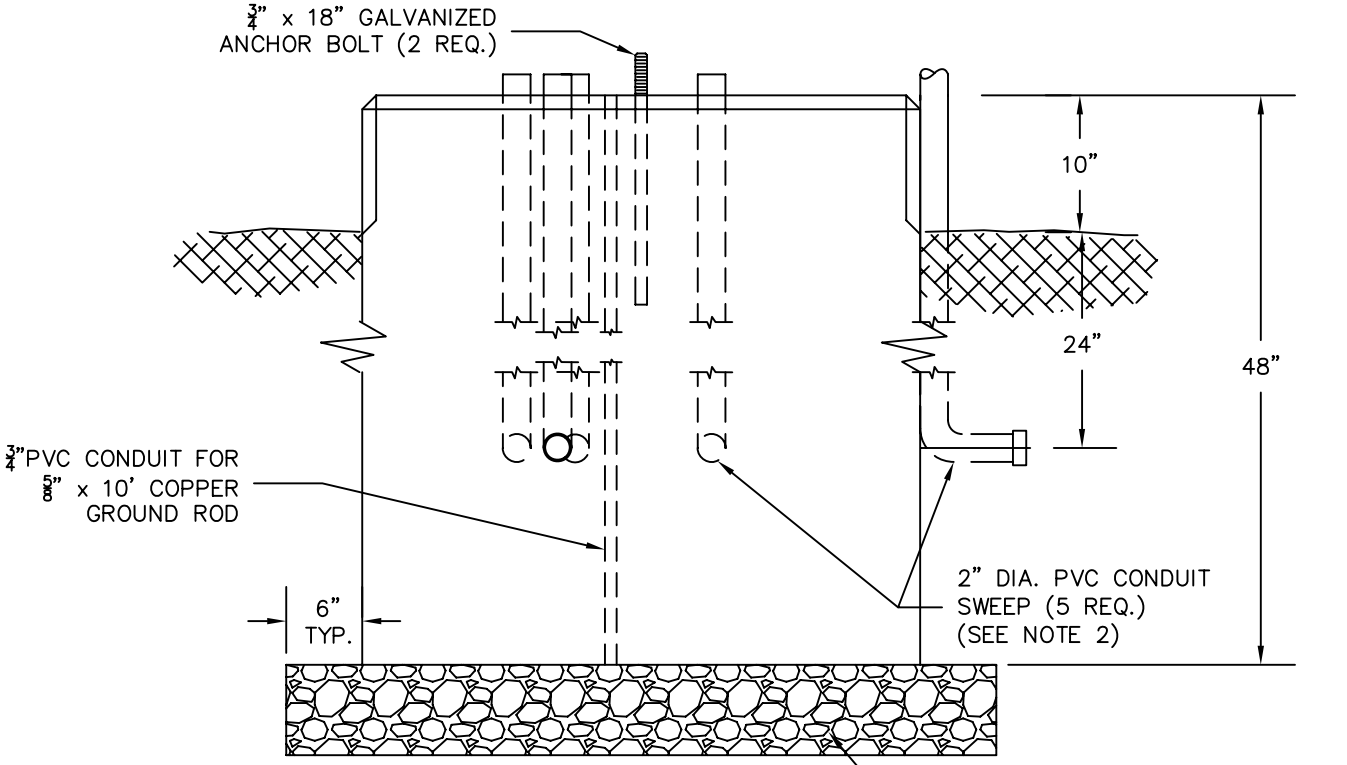

ELEVATION VIEW

8" PROCESSED AGGREGATE BASE

NOTES:

1. FOUNDATION SHALL BE OF CLASS "C" CONCRETE, AND MAY BE PRECAST.
2. ONE (1) SWEEP SHALL BE ON THE EXTERIOR AND DEDICATED FOR THE UTILITY CO. POWER FEED.
3. ALL SWEEPS SHALL BE 2" DIA. P.V.C. CONDUIT.

TOWN OF WINDSOR
Engineering Department

SCALE: HOR. NTS / VER. DATE: MAY 2010

STREET LIGHT CONTROLLER
FOUNDATION
D-404

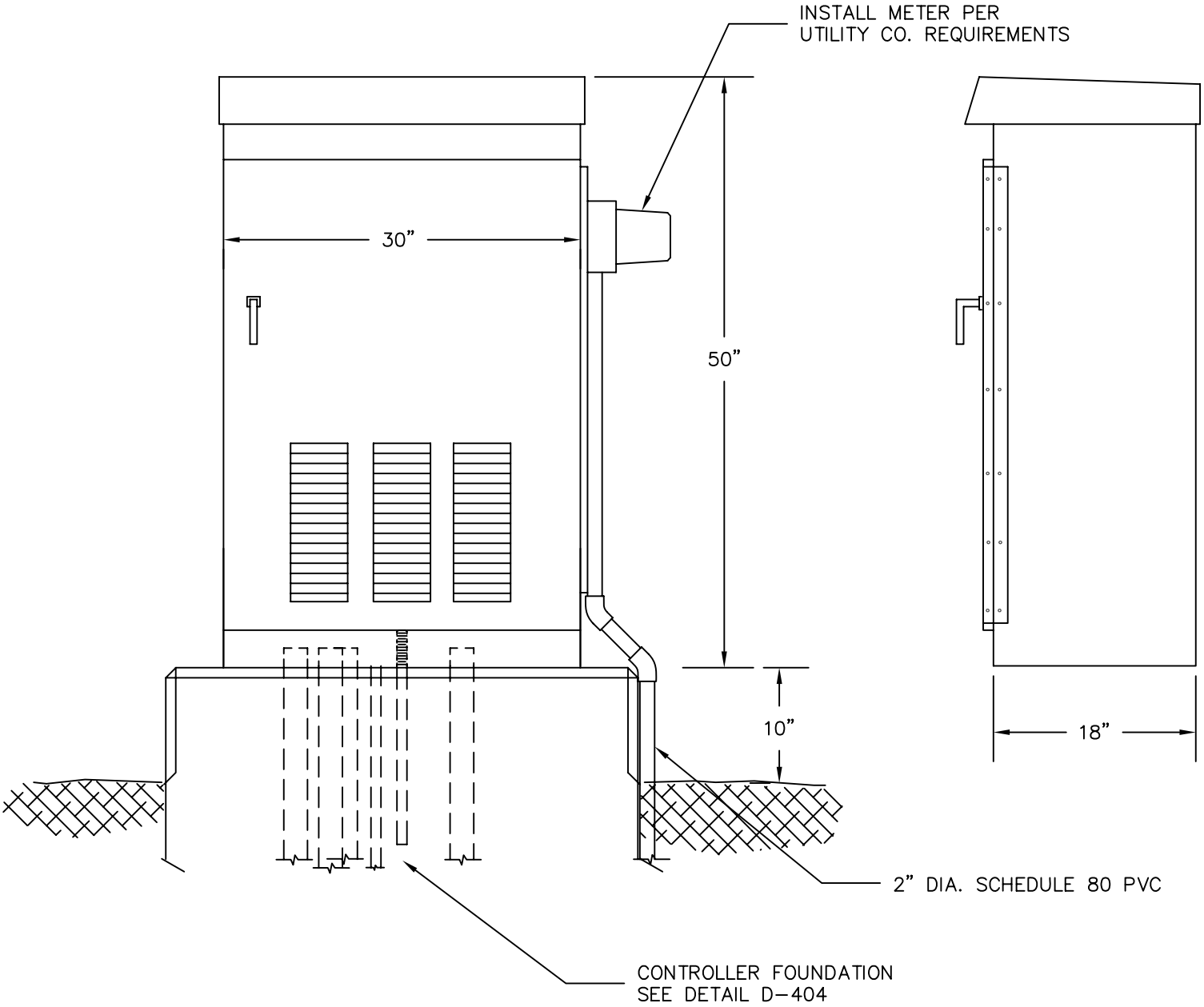

NOTES:

1. CABINET SHALL BE NEMA STANDARD SIZE M CABINET MADE OF ¼" THICK ALUMINUM.
2. CABINET SHALL HAVE OVERALL DIMENSIONS OF 50" HIGH BY 30" WIDE BY 18" DEEP UNLESS OTHERWISE APPROVED BY THE ENGINEER.
3. CABINET FINISH SHALL BE NATURAL ALUMINUM (UNPAINTED).
4. NO AUXILIARY SWITCH PANEL DOOR SHALL BE PROVIDED.
5. THE MAIN DOOR SHALL BE EQUIPPED WITH A CORBIN NO. 1548-1 TUMBLER LOCK (INDUSTRY #2 LOCK) AND TWO (2) KEYS SHALL BE FURNISHED TO THE TOWN.

TOWN OF WINDSOR
Engineering Department

SCALE: HOR. NTS / VER. DATE: MAY 2010

STREET LIGHT CONTROLLER CABINET
D-405

CODE	DESCRIPTION	SUGGESTED PRODUCT
MAIN	100 AMP 2 POLE 240 VOLT CIRCUIT BREAKER	G.E. #THQL 2100
CONT.	60 AMP 2 POLE 120 VOLE CIRCUIT BREAKER	G.E. #THQL 2100
LC	2 POLE 60 AMP LIGHTING CONTRACTOR	CUTLER–HAMMER #C30 DN2–AB
PC	STEM MOUNT PHOTO CONTROL	PRECISION MULTIPLE CONTROL ST–15
R	20 AMP 125 VOLT GFCI DUPLEX RECEPTACLE	
	INCANDESCENT LAMP HOLDER WITH PULL CHAIN	
LP	100 AMP MAINLUG ONLY, 8–12 CIRCUIT LOAD CENTER	G.E. #TLM 1612C OR APPROVED EQUAL
OR	60 MINUTE TIMER WITH HOLD FEATURE	INTERMATIC #FF60MH

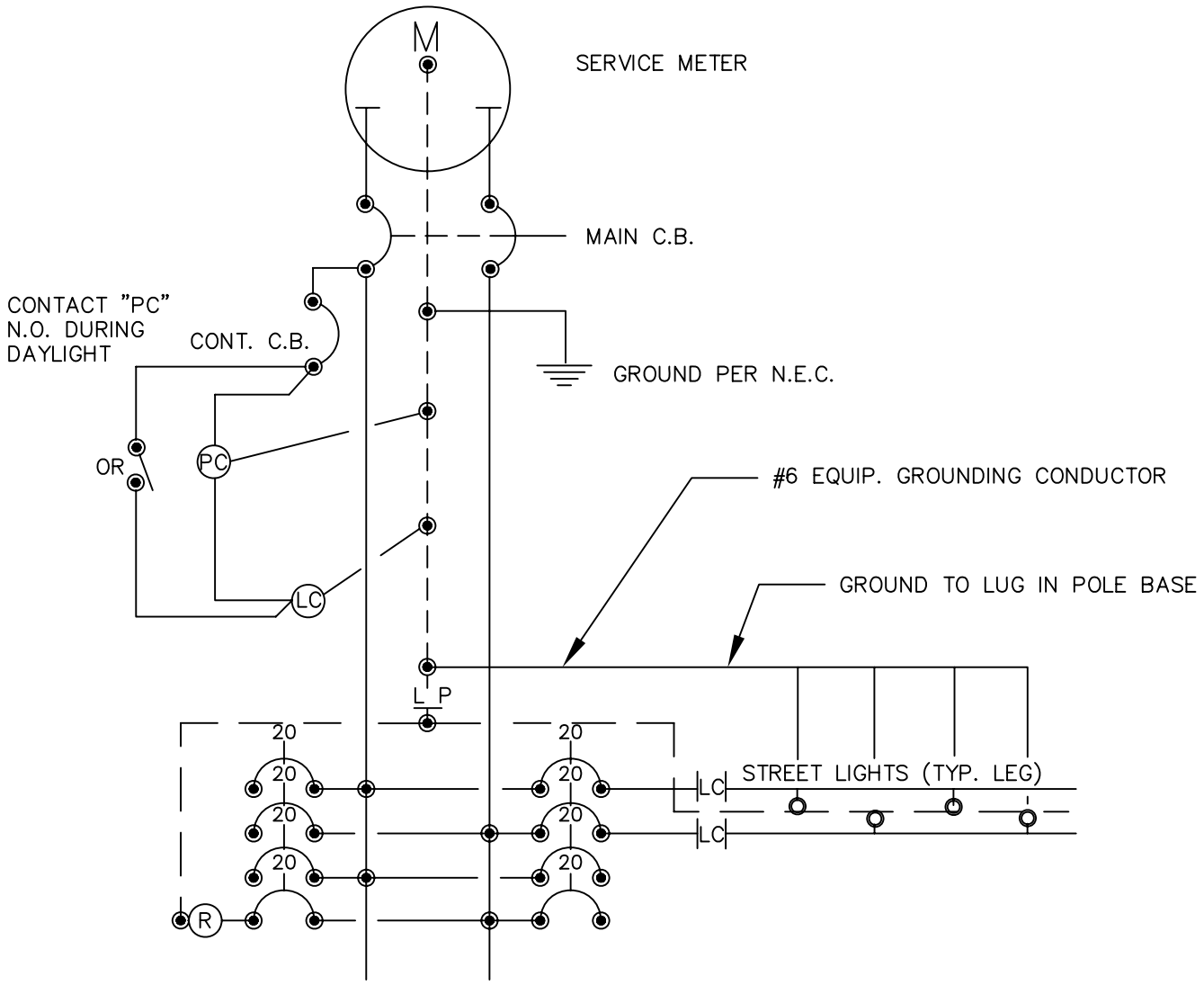

TOWN OF WINDSOR
Engineering Department

SCALE: HOR. NTS VER. DATE: MAY 2010

STREET LIGHT ELECTRICAL DIAGRAM–CONTROL PANEL
D–406

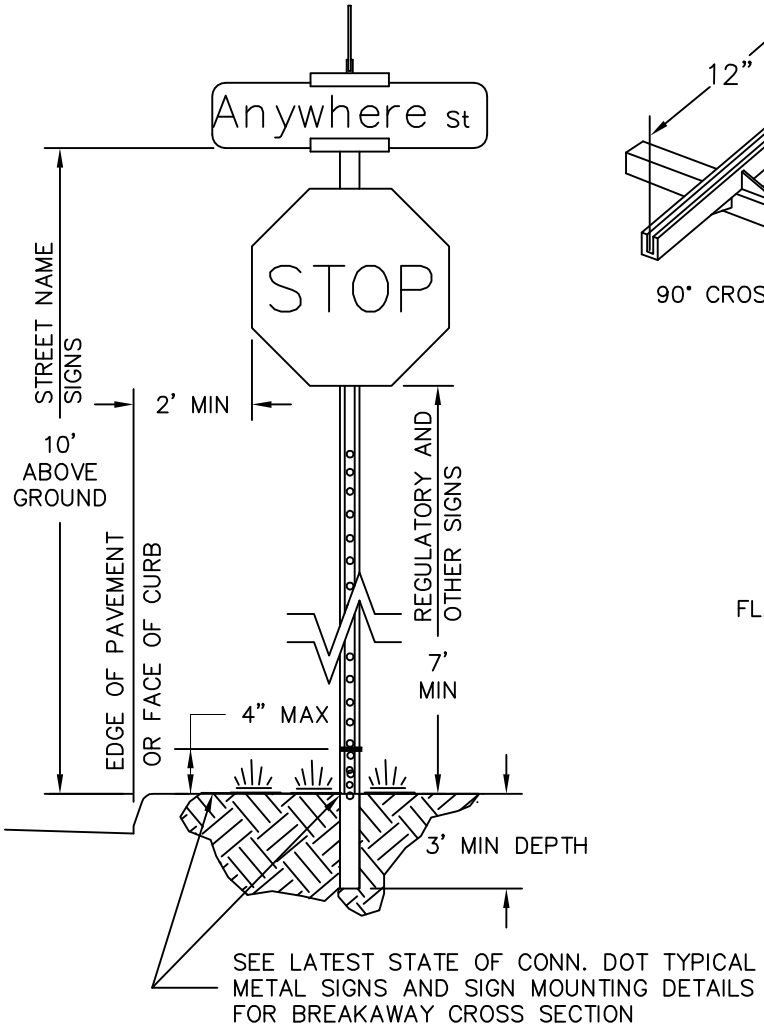

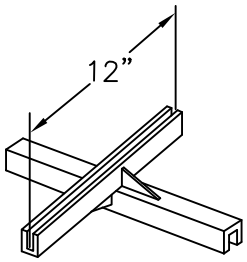

90° CROSSPIECE

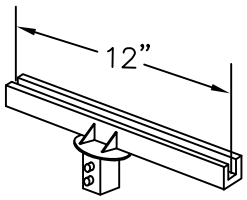

U-CHANNEL CAP @ 180°
BLADE SITS @ 180° TO
FLANGE ON U-CHANNEL POST

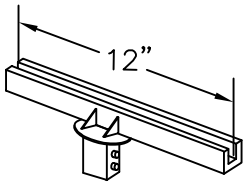

U-CHANNEL CAP @ 90°
BLADE SITS @ 90° TO
FLANGE ON U-CHANNEL POST

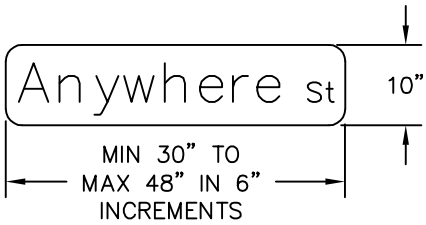

TYPICAL STREET NAME SIGN

FOR VISIBILITY, STREET NAME SIGNS MAY NOT ALWAYS BE MOUNTED ON STOP SIGNS AS SHOWN. FINAL LOCATION OF STREET NAME SIGNS SHALL BE DETERMINED BY THE LEGAL TRAFFIC AUTHORITY.

STREET NAME SIGNS:

1. SIZE: 10" HIGH BY THE NECESSARY LENGTH (MIN. 30" TO MAX 48" IN 6" INCREMENTS). LETTERS NOT TO BE CROWDED.
2. LETTER SIZE: 6" UPPERCASE AND CORRESPONDING 4.5" LOWERCASE FOR THE LEGEND (STREET NAME) AND 3" UPPERCASE AND LOWERCASE FOR THE SUFFIX (St, Rd, Ln, etc.).
3. FONT: CLEARVIEWHWY 2-W (NO EXCEPTIONS).
4. BACKGROUND: 3M WHITE DIAMOND GRADE VIP PLUS 3M 1177 ELECTRO-CUT GREEN FILM, WHITE LETTERS AND ½" BORDER WITH GREEN BACKGROUND.
5. SIGN MATERIAL: FLAT 0.080 GAUGE ALUMINUM WITH LEGEND ON BOTH SIDES AND WITH ROUNDED CORNERS.

OTHER REGULATORY SIGNS:

1. REGULATORY, WARNING, AND INFORMATIONAL SIGNAGE, PROPERTIES INCLUDING, BUT NOT LIMITED TO: SIZE, FONT STYLE, FONT SIZE, COLORS, SYMBOLS, AND LAYOUT SHALL CONFORM TO THE MANUAL OF UNIFORM CONTROL DEVICES, 2009, OR AS AMENDED.

SIGN POST

1. ALL SIGNS SHALL BE MOUNTED ON GALVANIZED STEEL BREAKAWAY U-CHANNEL POSTS, WITH A WEIGHT OF 3 POUNDS PER FOOT.

TOWN OF WINDSOR
Engineering Department

SCALE: HOR. NTS VER. DATE: NOV 2010

SIGNAGE
D-407

APPENDIX A

APPLICATION FOR REQUEST FOR LICENSE FORM

TOWN OF WINDSOR
ENGINEERING
275 BROAD STREET
WINDSOR, CONNECTICUT 06095

REQUEST FOR LICENSE

CONTRACTOR INFORMATION

Name: _____

Business Address: _____

Home Address: _____

Phone Numbers: List phone numbers of 2 key personnel to contact if there is a problem with a work area

NAME: ADDRESS: HOME TEL. BUSINESS TEL.

1. _____

2. _____

TYPE OF LICENSE

- ☐ Curb & Walk
- ☐ Drain, Pipe, or Conduit Layer
- ☐ Street Excavation/Driveways
- ☐ General Contractor (Curb, Walk, Drains, Drives & Excavations)

INSURANCE EXPIRATION DATE

General Liability: _____

Workers Compensation: _____

Auto Liability: _____

Indemnification: _____

Bond Issue Date: _____

LICENSE FEES: ☐ $75 New ☐ $50 Renewal

Paid: ☐ Cash ☐ Check #_____

Windsor License # _____

State License # (if any) _____

List 2 previous projects completed in the past 2 years involving the type of work that you are asking to be licensed for:

1. _____

2. _____

List 2 references familiar with the type of work that you are asking to be licensed for:

1. _____

2. _____

TOWN OF WINDSOR

Date License Issued: _____

ISSUED BY: _____

Date License Expires: _____

APPENDIX B

PERFORMANCE BOND - EXCAVATING

TOWN OF WINDSOR
ENGINEERING
275 BROAD STREET
WINDSOR, CONNECTICUT 06095

BOND - EXCAVATING

TO_____TOWN OF WINDSOR_____

WITHIN THE TOWN OF WINDSOR, CONNECTICUT

KNOW ALL MEN BY THESE PRESENTS, THAT _____

_____

As principal, and _____

_____ As Surety,

are held firmly bound unto the Town of Windsor, in the sum of Ten Thousand Dollars ($10,000.00) lawful money of the United States of America, to be paid to the said TOWN OF WINDSOR, its successors or assigns, for which payment, well and truly to be made, we find ourselves, our heirs, executors, administrators, successors and assigns, jointly and severally, firmly by these presents:

SIGNED AND SEALED, and dated at WINDSOR, this ___ day of _____ , _____.

THE CONDITION OF THIS OBLIGATION IS SUCH that whereas the above bounden principal has by the Town of Windsor (by the Town Manager or Town Manager's designee) been duly licensed as:

- ☐ a curb and walk layer
- ☐ a drain layer
- ☐ a street excavator
- ☐ a general contractor

NOW, THEREFORE, IF THE SAID _____ shall well and truly keep and perform, during said term, all the terms and conditions of the ordinances of the Town of Windsor, regulating excavations in the Town's right-of-way, and shall indemnify and save harmless the Town of Windsor and said Town Manager or Town Manager's designee and his agents from all suites and actions of every name and description brought against said Town, or any officers of said Town, for or on account of any injuries or damages received or sustained by any person in consequence of or resulting from any work performed by said principal _____ their servants or agents, or of, or from any negligence in guarding said work, or of or for any act of omission of said principal _____ servants or agents; shall faithfully perform said work in all respects and shall guarantee his work for a period of 3 years after completion, against any failure caused by defective materials, or defective workmanship and will make good such defects, if so ordered, to the satisfaction of the Town Manager or the Town Manager's designee, and shall comply in all respects with the rules and regulations established relative to such work, and with the terms of the permits that may be issued to him.

Signed and Sealed in the presence of

_____ _____

_____ _____

_____ _____

_____

APPENDIX C

APPLICATION FOR PERMIT FORM

TOWN OF WINDSOR
First in Connecticut. First for its citizens.

TOWN OF WINDSOR
ENGINEERING
275 BROAD STREET
WINDSOR, CONNECTICUT 06095

PERMIT NO. _____
Date _____
Permit Fee _____
Starting Date _____
Permit Expires _____
(2 months after Starting Date)
Issued By
_____

APPLICATION FOR PERMIT

PERMIT TYPE

Street Excavation ☐ Driveway ☐

INSURANCE EXPIRATION DATE _____

LICENSE NO. _____

BOND ISSUE DATE _____

CALL BEFORE YOU DIG
1-800-922-4455
No. _____

COMPLETE THIS SECTION

Address of proposed work _____

Applicant's Name _____ Utility _____

Address _____

Tel. No. _____ Emergency Tel No. _____

Name of Property Owner _____

Describe nature of permit work _____

Is the work adjacent to or involve the Town's sidewalk? Yes ☐ No ☐

DRAW SKETCH SHOWING: EXISTING LAYOUT, PROPOSED WORK, AND DIMENSIONS:

***Authorization is required from the Town Forester of any tree location on Town Property is to be removed or disturbed by proposed construction (285-1884).*

The applicant understands and agrees that all work shall conform to the rules, regulations and specifications of the Town of Windsor, Engineering Standards and Specifications and to maintain the cut pavement with a temporary patch, to restore the pavement as required including maintaining the pavement repair for five years, to reimburse the Town for all costs incurred by the Town for repair work in connection with the permit and to indemnify and save harmless the Town from all damages caused by acts or omissions while acting under the permit.

PERMITTEE MUST NOTIFY THE ENGINEERING CONSTRUCTION INSPECTOR, 2 WORKING DAYS PRIOR TO STARTING THE WORK. PHONE 860 285-1876.

PERMITTEE SHALL COMPLY WITH THE "PROCEDURES TO BE FOLLOWED FOR ROAD CLOSING AND TRAFFIC CONTROL". SEE BACK OF THIS PAGE.

Signed _____ Date _____

Title _____

THIS PERMIT OR A FACSIMILE MUST BE PRESENT ON THE JOB SITE AT ALL TIMES

APPENDIX D

SUBDIVISION/CONSTRUCTION CHECKLIST

SUBDIVISION/CONSTRUCTION CHECKLIST

NAME: _____ TP&Z APPROVAL DATE: _____

TP&Z EXPIRATION DATE: _____

DEVELOPER: _____

ADDRESS: _____

PHONE: _____ FAX: _____

CONTRACTOR: _____

ADDRESS: _____

PHONE: _____ FAX: _____

CONTRACTOR: _____

ADDRESS: _____

PHONE: _____ FAX: _____

CONTRACTOR: _____

ADDRESS: _____

PHONE: _____ FAX: _____

ENGINEER: _____

ADDRESS: _____

PHONE: _____ FAX: _____

All Public Improvements will be inspected using the following guidelines as applicable.

I. Drainage

A. Piping

- ☐ All pipes are laid on grade
- ☐ Proper bedding and backfill material is used
- ☐ No settlement is occurring
- ☐ All pipes are clean
- ☐ Locator wire has been installed

☐ No pipes are "sucking" dirt

General Comments: _____

_____

_____

B. Catch Basins

☐ Catch basins are located properly

☐ Catch basins are set or formed on proper bedding material

☐ Joints are mortared and smooth

☐ Exterior of catch basins are wrapped with filter fabric

☐ Tops are set in ½ of mortar

☐ Catch basins are not "sucking" dirt or mortar

☐ Catch basins over 4 feet deep have steps

☐ Catch basins are clean

☐ All pipes are flush at interior face and mortared

General Comments: _____

_____

_____

C. Manholes

☐ Manholes are located properly

☐ Manholes are set or formed on proper bedding material

☐ Joints are properly sealed

☐ Exterior of manholes are wrapped with filter fabric

☐ Manhole covers are set to grade

☐ Manholes are not "sucking" dirt or mortar

☐ Manholes over 4 feet deep have steps

☐ Manholes are clean

☐ All pipes are flush at interior face and mortared

☐ Inverts are completed

General Comments: _____

_____

D. Drywells

☐ Drywells are located properly

☐ Drywells are plumb and properly set

☐ Stone size and placement are proper to avoid stone migration into drywells

- ☐ Filter fabric is used and placed properly to avoid soil migration.
- ☐ Access holes are offset with steps
- ☐ Drywells are clean

General Comments: _____

_____

_____

E. Drains/Underdrains

- ☐ All pipes are laid properly
- ☐ Proper bedding or drain stone is used
- ☐ No settlement is occurring
- ☐ All pipes are clean
- ☐ Locator wire has been installed
- ☐ Pipes have been videoed

General Comments: _____

_____

_____

II. Headwalls/Channeling/Rip Rap

A. Brook

- ☐ The brook is stabilized
- ☐ Brook is properly cleaned to receive drainage
- ☐ Stabilization treatment is properly installed
- ☐ Erosion is not occurring to embankments

General Comments: _____

_____

_____

B. Rip Rap/Plunge Pools

- ☐ The proper size and amount of rip rap is used
- ☐ The rip rap is slushed to ensure velocity control
- ☐ The rip rap is sloped properly for embankment control

General Comments: _____

_____

_____

C. Headwalls

- ☐ The headwalls are properly located
- ☐ Each headwall conforms to Town standards and to the dimensions required
- ☐ Settlement is not occurring
- ☐ The headwalls are properly rubbed for final finish

General Comments: _____

_____

_____

D. Retention/Detention Basins

- ☐ The basin is sized and located properly
- ☐ Inlet and outlet pipes are at the proper elevation
- ☐ The slopes are stabilized
- ☐ The loam and seeding treatment is adequate in adjacent areas

General Comments: _____

_____

_____

E. Erosion Control

- ☐ All erosion control measures have been taken
- ☐ All areas with loam and seeding or other plantings are established to ensure stable conditions
- ☐ No erosion is taking place in the subdivision

General Comments: _____

_____

_____

III. Roads

A. Base

- ☐ Adequate base is installed in accordance with the Town Standard or as per plans
- ☐ The base is properly graded to ensure the proper cross slope

General Comments: _____

_____

_____

B. Binder

☐ The binder is established on the road

General Comments: _____

_____

_____

C. Retention/Detention Basins

☐ Tack coat has been applied

☐ Adequate wear course is placed over the road

☐ Cracks are nor appearing in the surface

☐ Cracks are sealed with "hot" material and are proper

☐ There are no puddles in the pavement

General Comments: _____

_____

_____

D. Curbing

☐ The curbing is installed in accordance with the plans

☐ The curbing was repaired where there were cracks, gouging, or other damage

General Comments: _____

_____

_____

E. Driveways

☐ Driveways are paved to drain to the street

☐ Joints in the driveway are sealed properly

General Comments: _____

_____

_____

IV. Sidewalks and Right-of-Way Grading

A. Sidewalks

☐ Sidewalks are located within the right-of-way

☐ Dowels are properly installed

☐ Sidewalks are uniform and properly graded to avoid puddles and drain toward the street

☐ The thickness of the walks is correct

☐ No cracks appear in the surface

General Comments: _____

_____

_____

B. Ramps

☐ Ramps and detectable warning strips are properly located and installed

General Comments: _____

_____

_____

C. Grading

☐ The grading throughout the development is proper to ensure positive drainage

☐ All snow shelves are graded to the street

General Comments: _____

_____

_____

D. Loam and Seed

☐ Proper loam is used within the development

☐ The seed is of good quality and is established

General Comments: _____

_____

_____

E. Plantings

☐ Plantings are placed in accordance with the plans

General Comments: _____

_____

_____

V. Miscellaneous Items

A. Merestones/Iron Pins

☐ All lots and street lines have been marked and certified by a Connecticut licensed land surveyor

General Comments: _____

_____

_____

B. Signs

☐ All signs are installed properly and have been paid for

General Comments: _____

_____

_____

C. Street Lights

☐ All street lights and poles are installed properly and have been paid for

General Comments: _____

_____

_____

D. Yard trees

☐ All yard trees are planted or exist on the lot as required

General Comments: _____

_____

_____

E. Deeds

☐ Deeds to the roads, easements, and other land are received and are accurate

General Comments: _____

_____

_____

F. As-Built Plans

☐ As-built plans were received and are accurate

☐ The location of roads and sidewalks and other visible features are properly shown

☐ All utility locations are properly shown

☐ Drain lines from homes are properly shown

☐ Elevations of underground utilities are indicated

☐ All drainage structures and pipes, with sizes, and TF's and FL's are shown

☐ Grading of detentions basins, swales, and other stormwater controls is shown

General Comments: _____

_____

_____

DATE OF INSPECTION	NAME OF INSPECTOR